JULY 5, 2001 (P= - 0.86, Bo = 3.32, Lo = 295.56)

KITT PEAK MAGNETOGRAM

868.8 nm

Bright = +
Dark = -

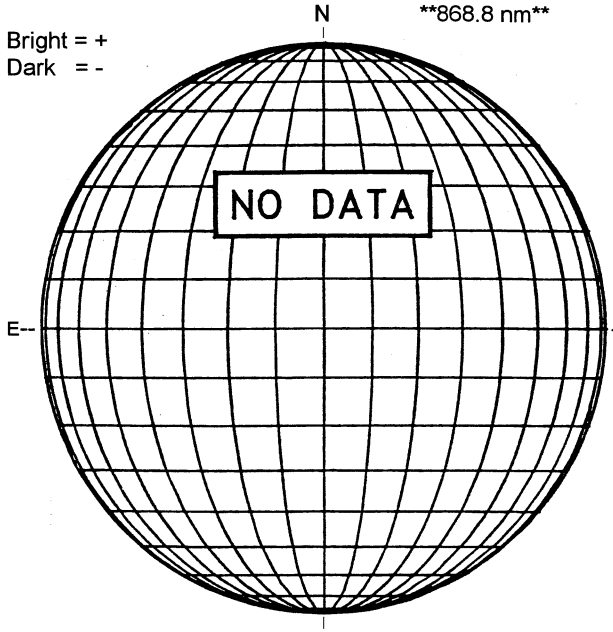

STANFORD MAGNETOGRAM

Solid = +
Dashed = -

2126 UT

MT. WILSON MAGNETOGRAM

DeltaY =
DeltaX =

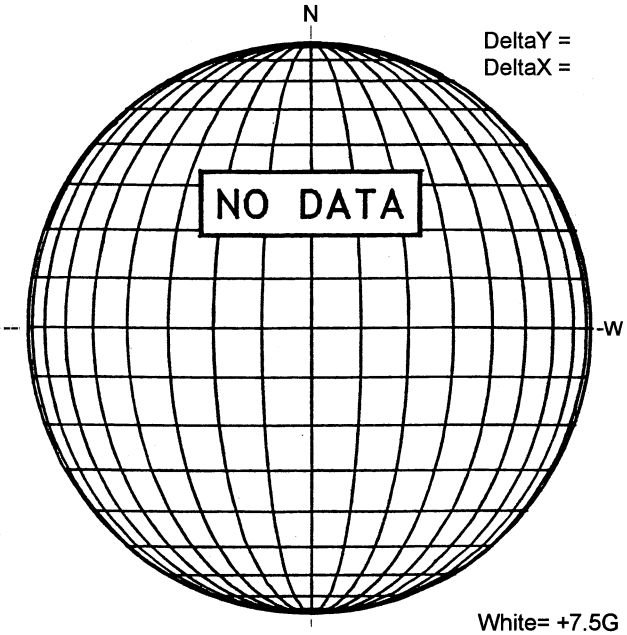

White= +7.5G
Black = -7.5G

MEUDON H-ALPHA

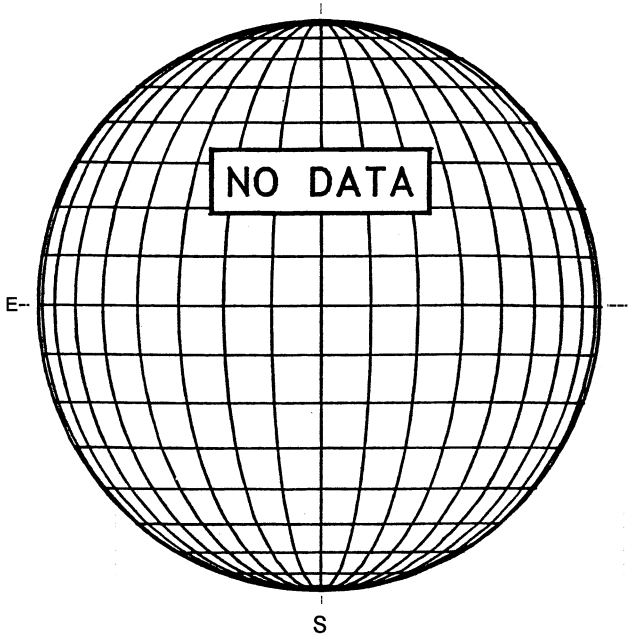

HOLLOMAN SUNSPOT

HOLLOMAN SUNSPOTS
July 05, 2001
15:33 UT Good
Bp = 3.3
Po = -0.5
Lo = 287.8

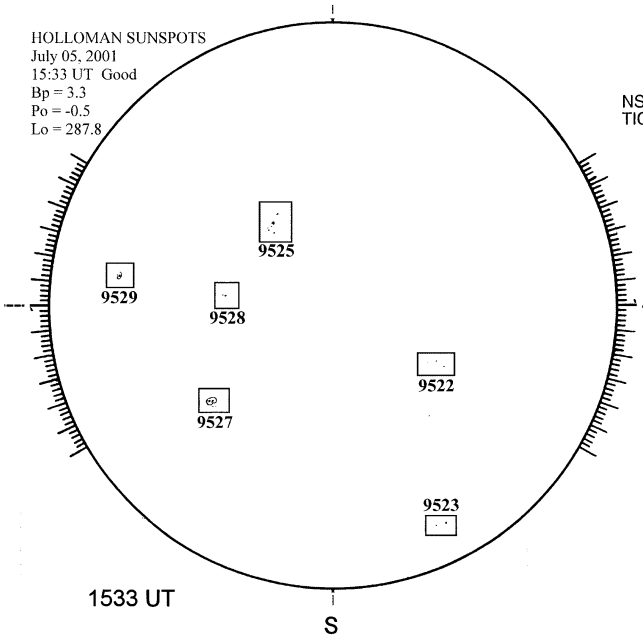

1533 UT

SACRAMENTO PEAK CORONA (1.15 Radii)----

NSO / SACRAMENTO PEAK CORONAL DATA
TICK MARKS EVERY 20 MILLIONTHS

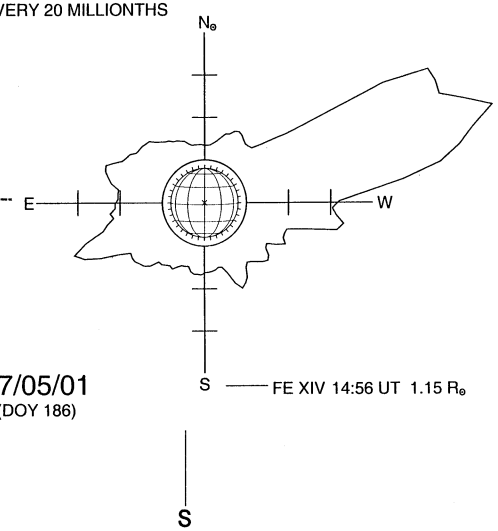

07/05/01
(DOY 186)

FE XIV 14:56 UT 1.15 R⊙