JUNE 19, 2001 (P= -8.05, Bo = 1.51, Lo = 147.35)

KITT PEAK MAGNETOGRAM

N

868.8 nm

Bright = +
Dark = -

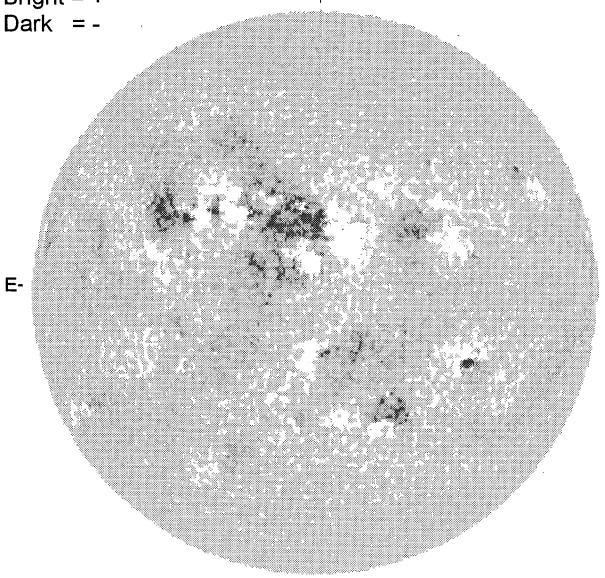

E-

1552 UT

STANFORD MAGNETOGRAM

N

Solid = +
Dashed = -

2004 UT

MT. WILSON MAGNETOGRAM

N

DeltaY = 13.1
DeltaX = 9.6

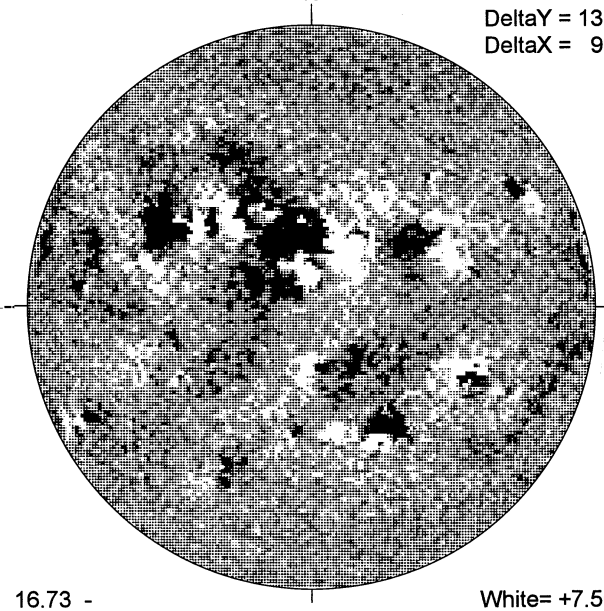

-W

16.73 -
17.64 UT

White= +7.5G
Black = -7.5G

MEUDON H-ALPHA

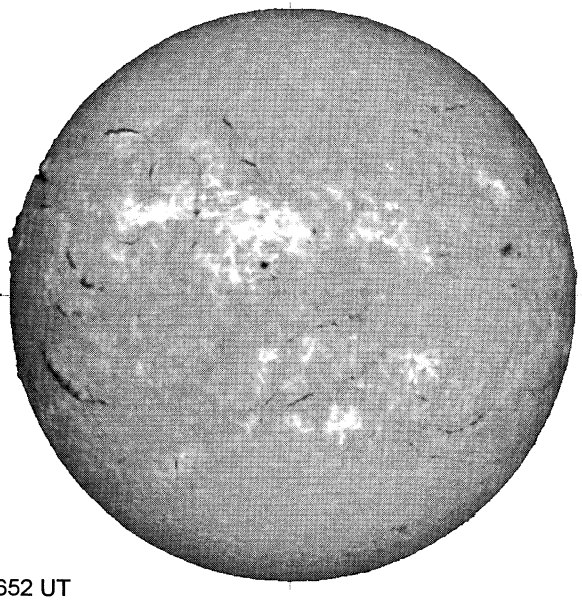

E--

0652 UT

S

RAMEY SUNSPOT

RAMEY SUNSPOTS
June 19, 2001
12:19 UT Fair
Bp = 1.5
Po = -7.8
Lo = 141.1

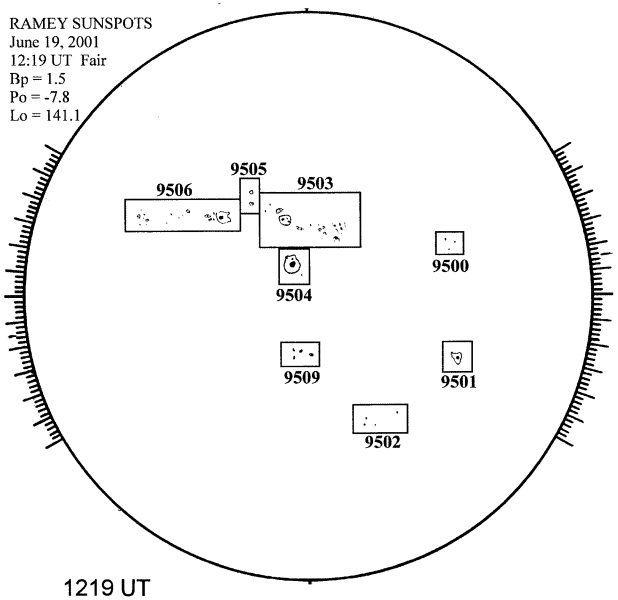

1219 UT

S

SACRAMENTO PEAK CORONA (1.15 Radii)

NSO / SACRAMENTO PEAK CORONAL DATA
TICK MARKS EVERY 20 MILLIONTHS

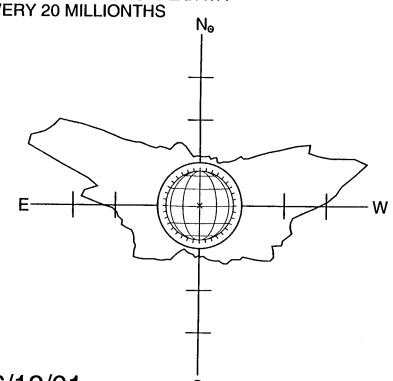

---W

06/19/01
(DOY 170)

FE XIV 15:34 UT 1.15 R⊙

S