JUNE 16, 2001 (P= -9.36, Bo = 1.15, Lo = 187.05)

KITT PEAK MAGNETOGRAM

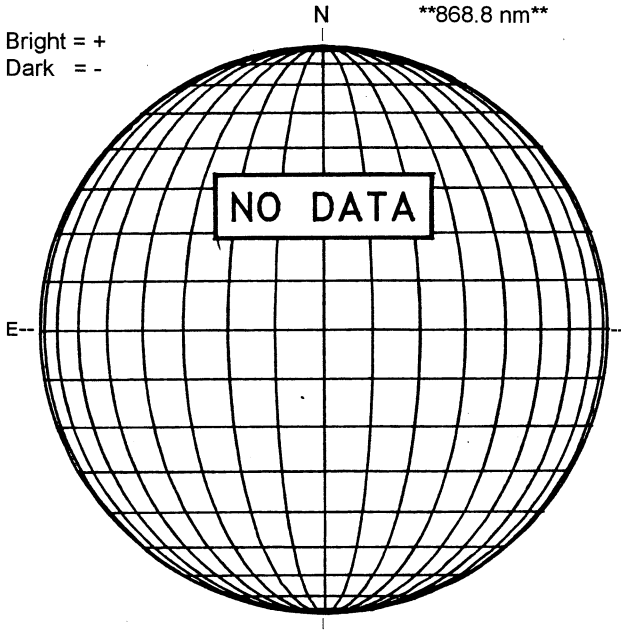

STANFORD MAGNETOGRAM

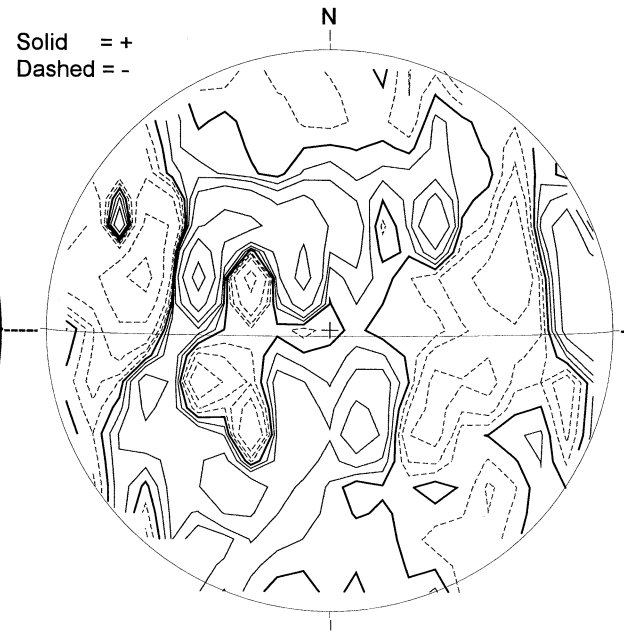

MT. WILSON MAGNETOGRAM

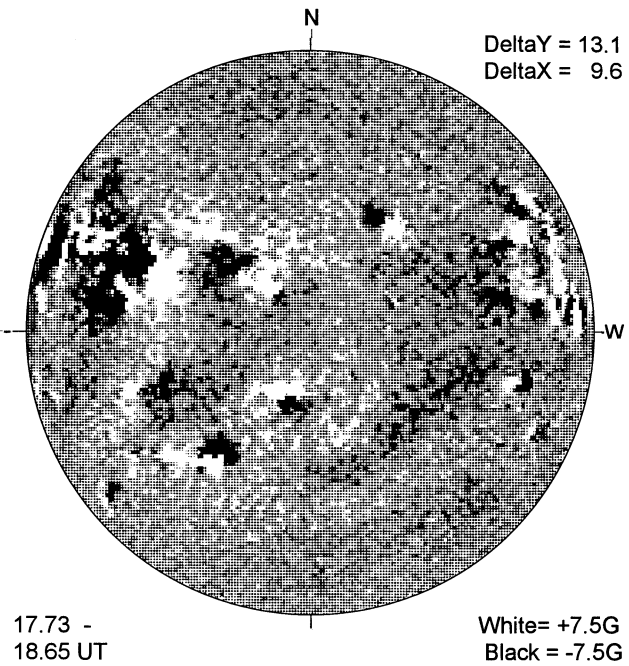

MEUDON H-ALPHA

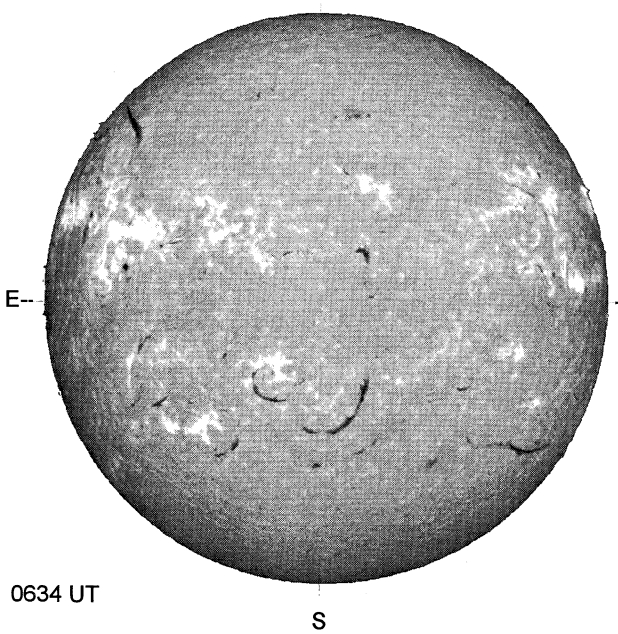

RAMEY SUNSPOT

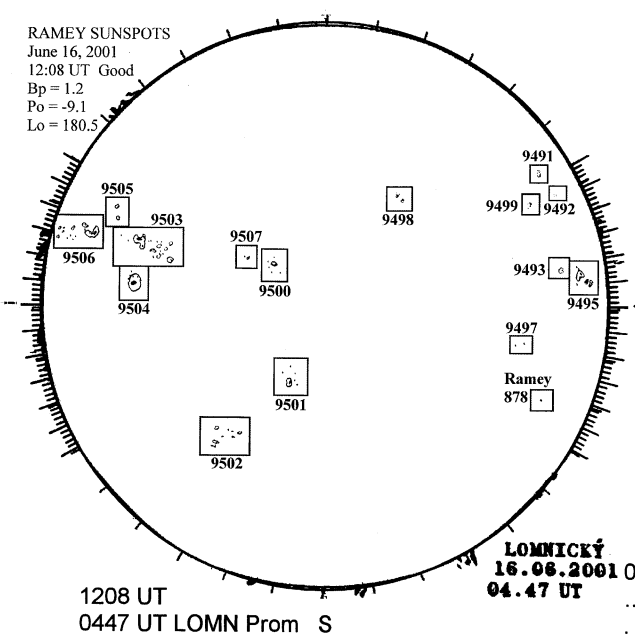
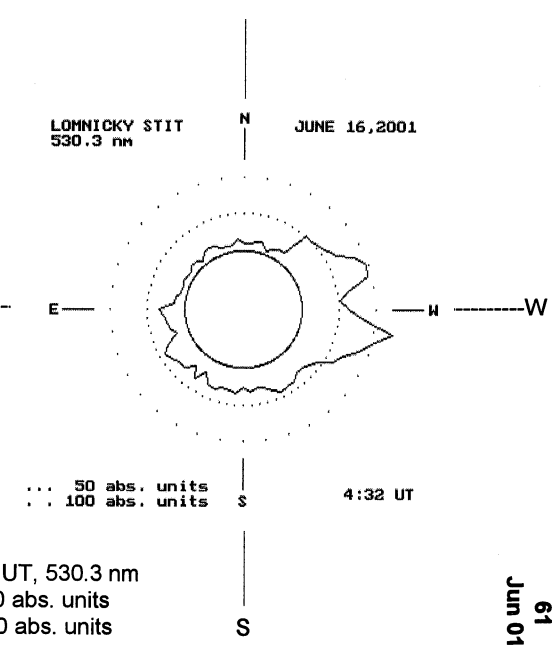
LOMNICKY PEAK CORONA (1.04 Radii)----