JUNE 15, 2001 (P= -9.79, Bo = 1.03, Lo = 200.29)

KITT PEAK MAGNETOGRAM

N **868.8 nm**

Bright = +
Dark = -

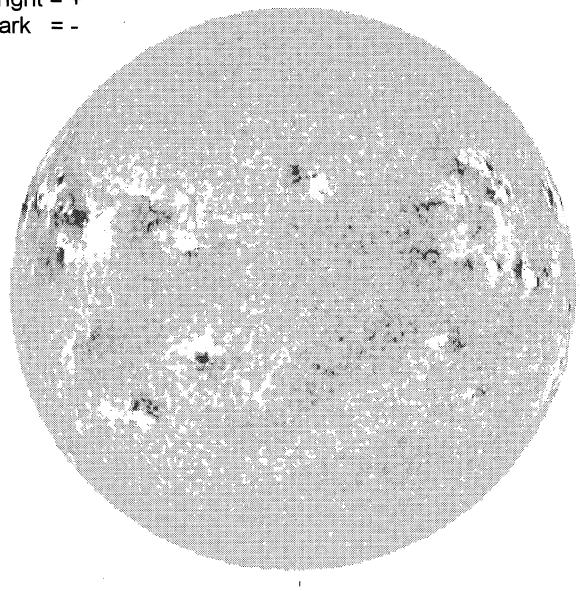

E-

1529 UT

STANFORD MAGNETOGRAM

N

Solid = +
Dashed = -

2025 UT

MT. WILSON MAGNETOGRAM

N

DeltaY = 13.1
DeltaX = 9.6

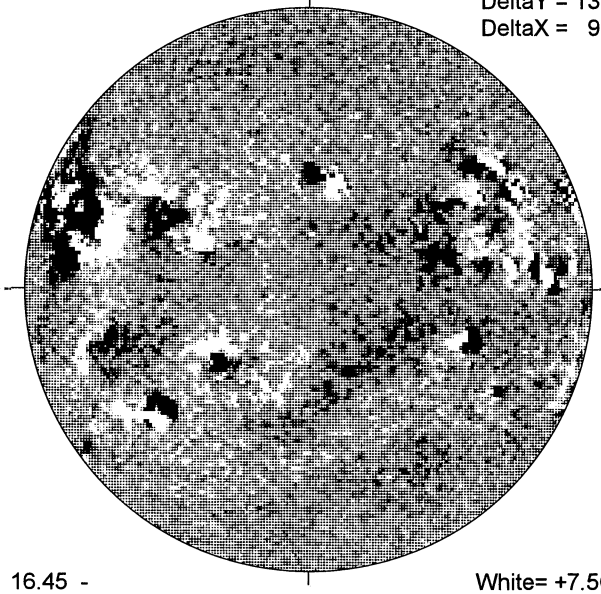

-W

16.45 -
17.37 UT

White= +7.5G
Black = -7.5G

MEUDON H-ALPHA

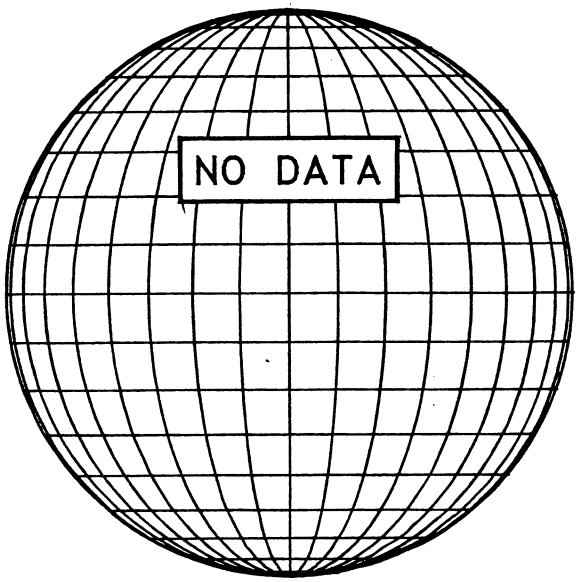

E-

S

RAMEY SUNSPOT

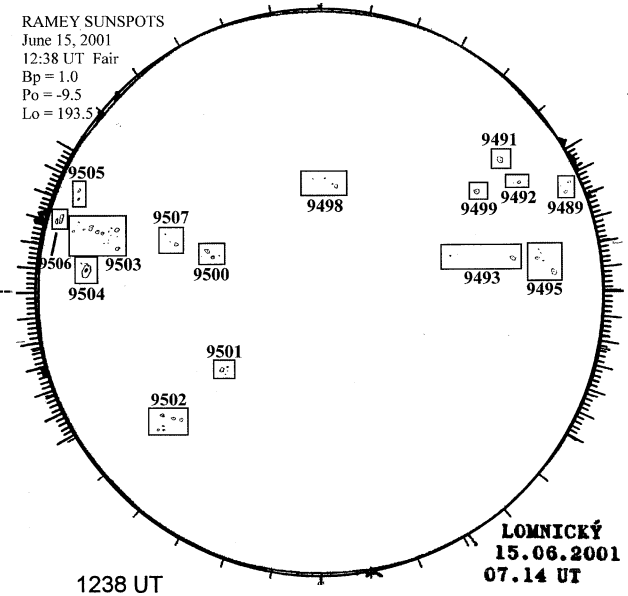

1238 UT
0714 UT LOMN Prom S

SACRAMENTO PEAK CORONA (1.15 Radii)----

NSO / SACRAMENTO PEAK CORONAL DATA
TICK MARKS EVERY 20 MILLIONTHS

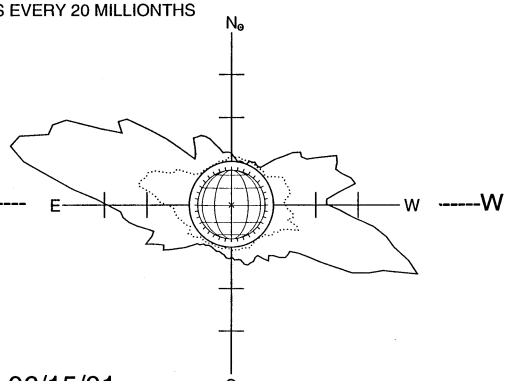

-----W

06/15/01
(DOY 166)

FE XIV 15:14 UT 1.15 R☉
FE X 16:06 UT 1.15 R☉
xxxxx CA XV 15:52 UT 1.15 R☉
NO CA XV ACTIVITY TODAY

S