JUNE 1, 2001 (P= -15.42, Bo = -0.65, Lo = 25.59)

KITT PEAK MAGNETOGRAM

Bright = +
Dark = -

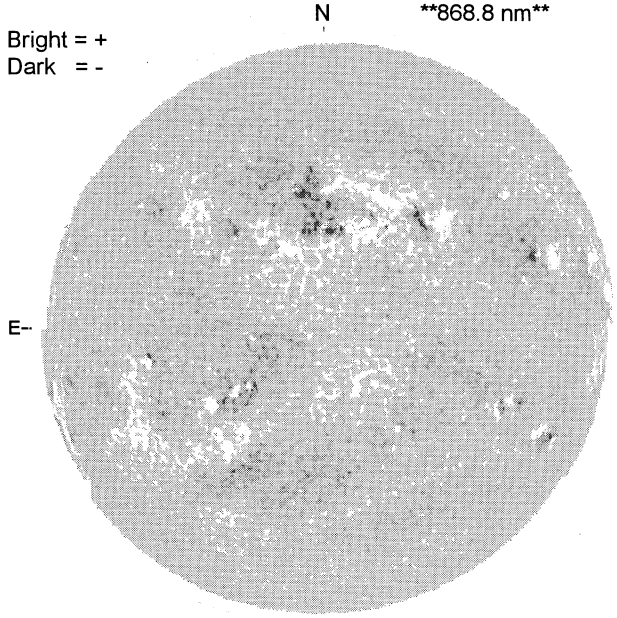

1816 UT

STANFORD MAGNETOGRAM

Solid = +
Dashed = -

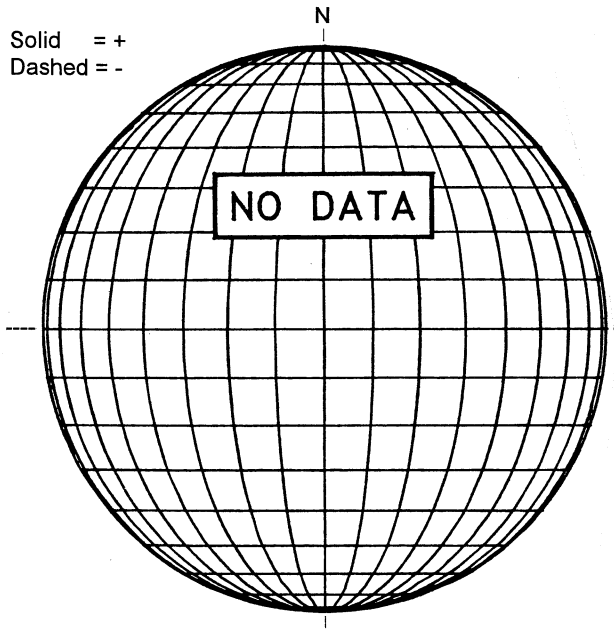

MT. WILSON MAGNETOGRAM

DeltaY = 13.1
DeltaX = 9.6

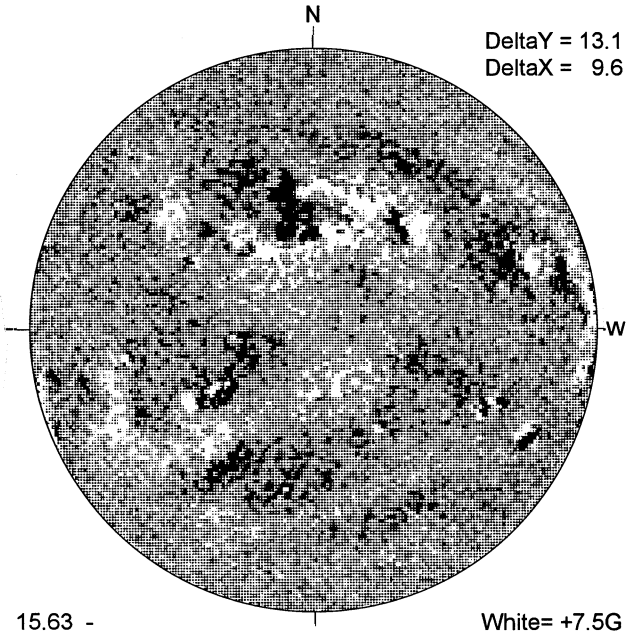

15.63 -
16.55 UT

White= +7.5G
Black = -7.5G

MEUDON H-ALPHA

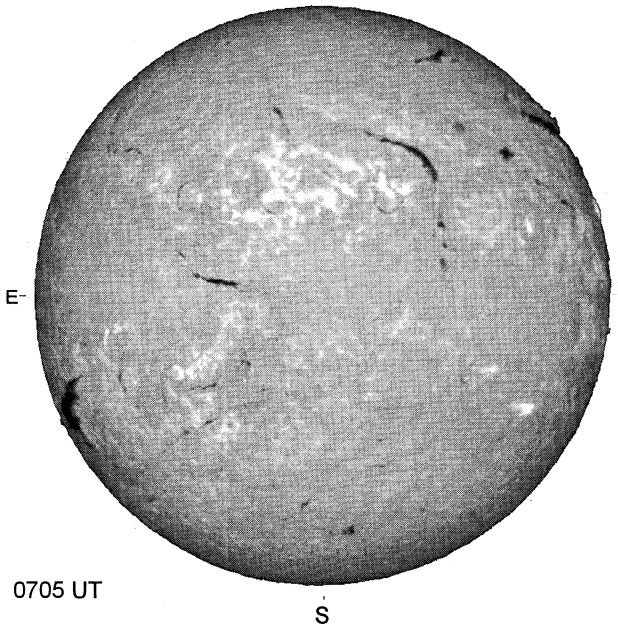

0705 UT

RAMEY SUNSPOT

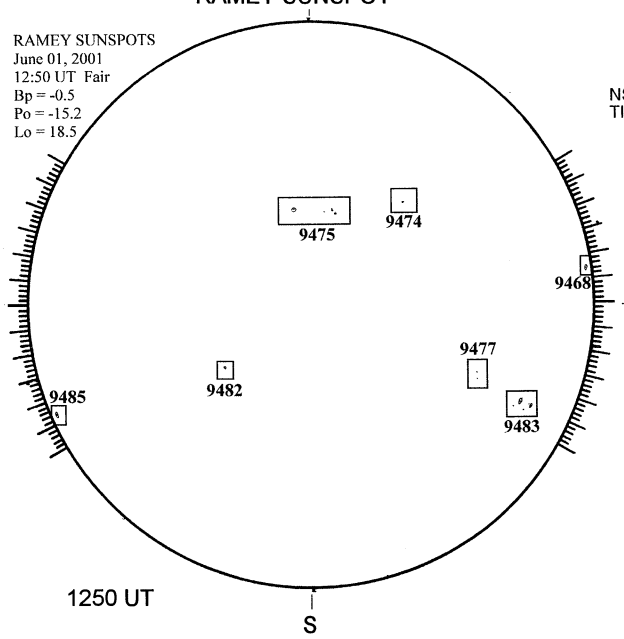

1250 UT

SACRAMENTO PEAK CORONA (1.15 Radii)

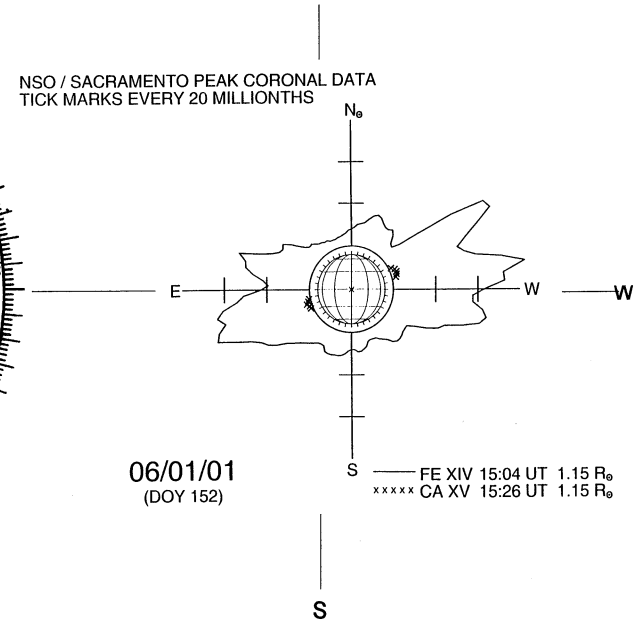

06/01/01
(DOY 152)