MAY 25, 2001 (P= -17.91, Bo = -1.49, Lo = 118.21)

KITT PEAK MAGNETOGRAM

868.8 nm

Bright = +
Dark = -

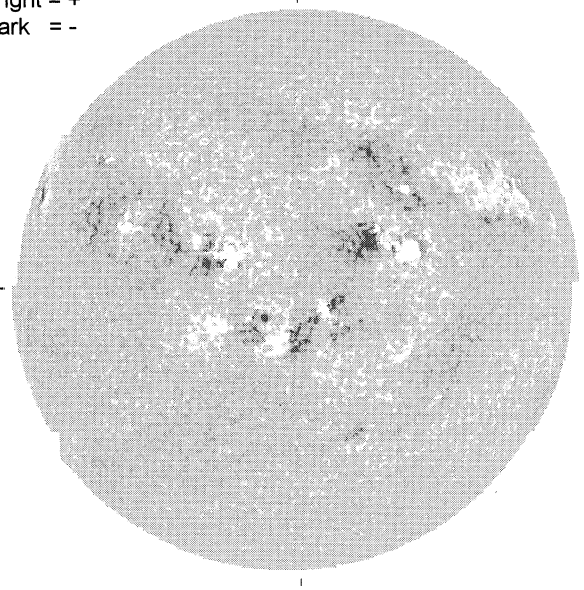

1420 UT

STANFORD MAGNETOGRAM

Solid = +
Dashed = -

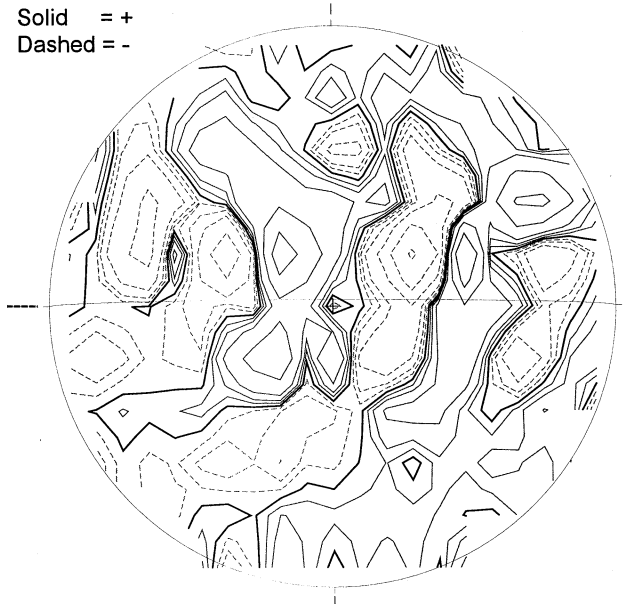

2338 UT

MT. WILSON MAGNETOGRAM

DeltaY = 13.1
DeltaX = 9.6

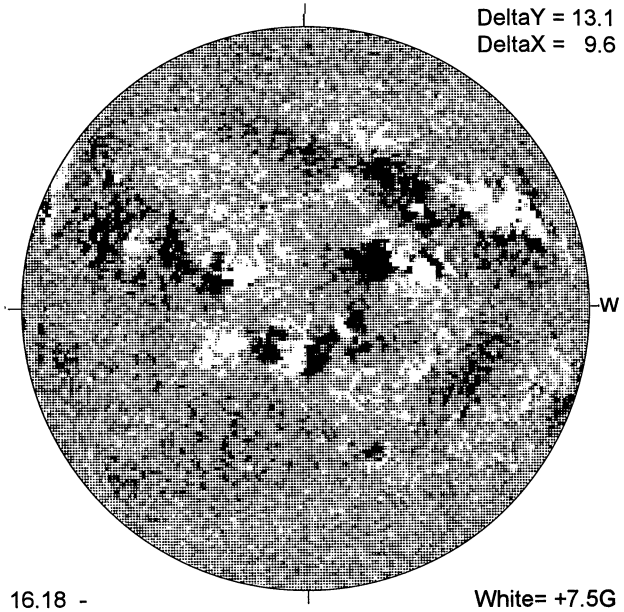

16.18 -
17.11 UT

White= +7.5G
Black = -7.5G

MEUDON H-ALPHA

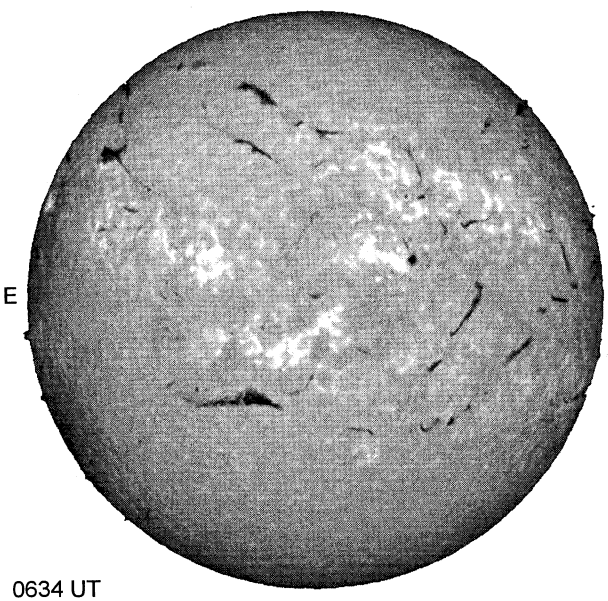

0634 UT

RAMEY SUNSPOT

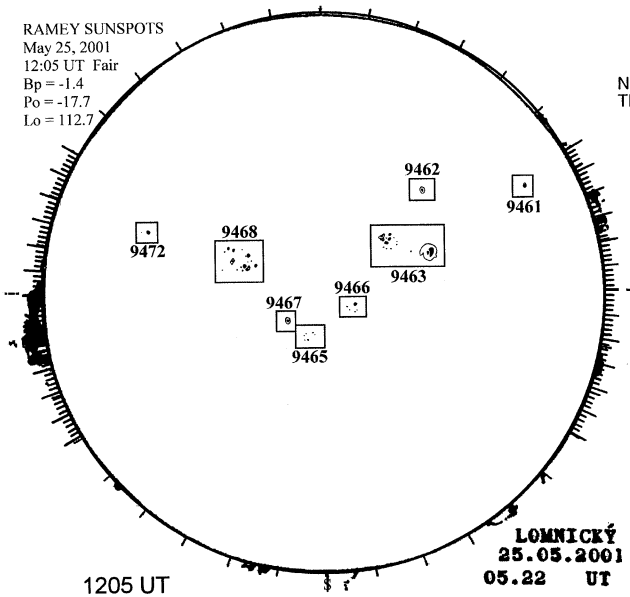

1205 UT
0522 UT LOMN Prom

SACRAMENTO PEAK CORONA (1.15 Radii)

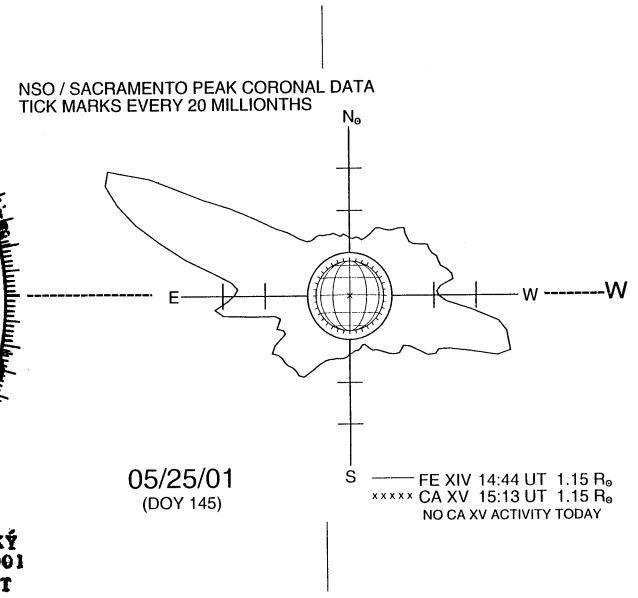

05/25/01
(DOY 145)