MAY 15, 2001 (P= -20.97, Bo = -2.66, Lo = 250.49)

KITT PEAK MAGNETOGRAM

N **868.8 nm**

Bright = +
Dark = -

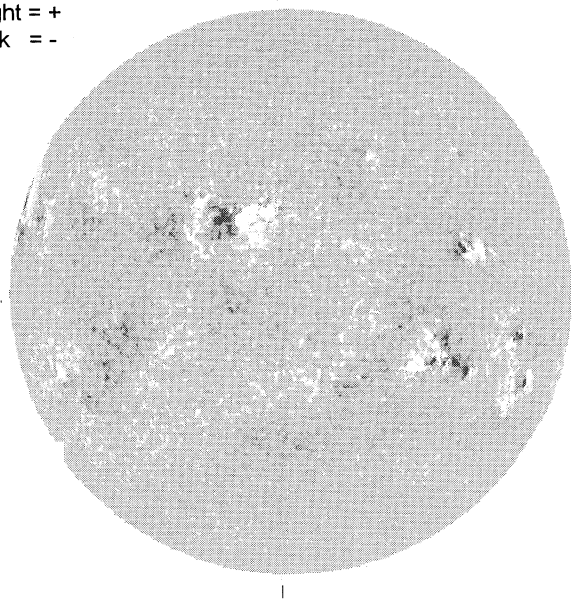

E---

1415 UT

STANFORD MAGNETOGRAM

N

Solid = +
Dashed = -

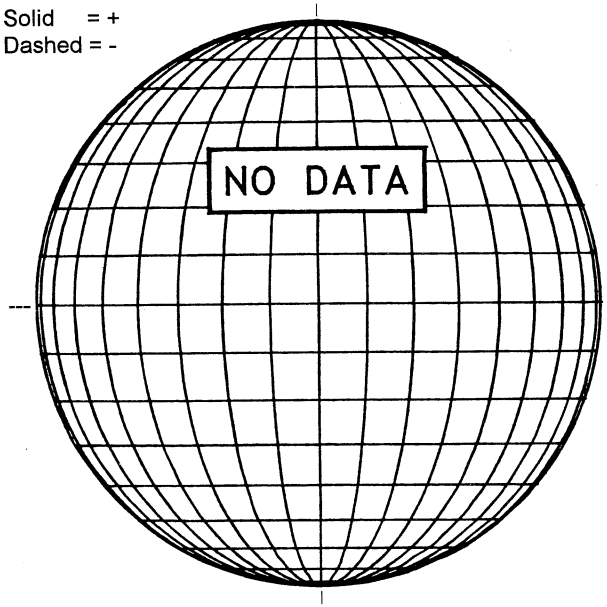

MT. WILSON MAGNETOGRAM

N

DeltaY =
DeltaX =

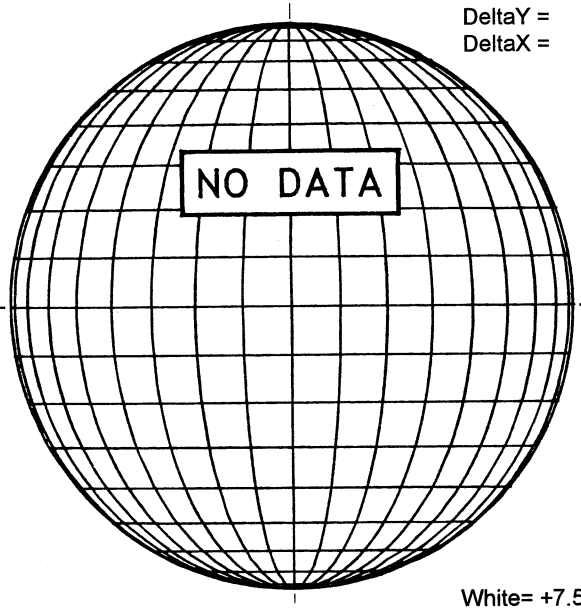

-W

White= +7.5G
Black = -7.5G

MEUDON H-ALPHA

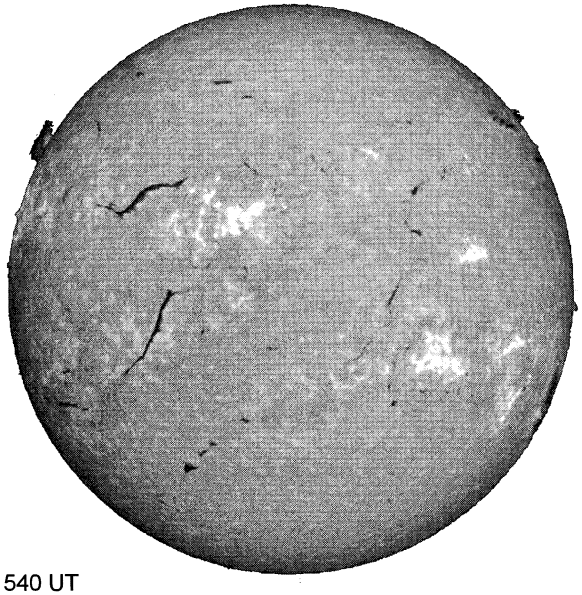

E

1540 UT

S

HOLLOMAN SUNSPOT

HOLLOMAN SUNSPOTS
May 15, 2001
17:30 UT Fair
Bp = -2.5
Po = -20.7
Lo = 241.2

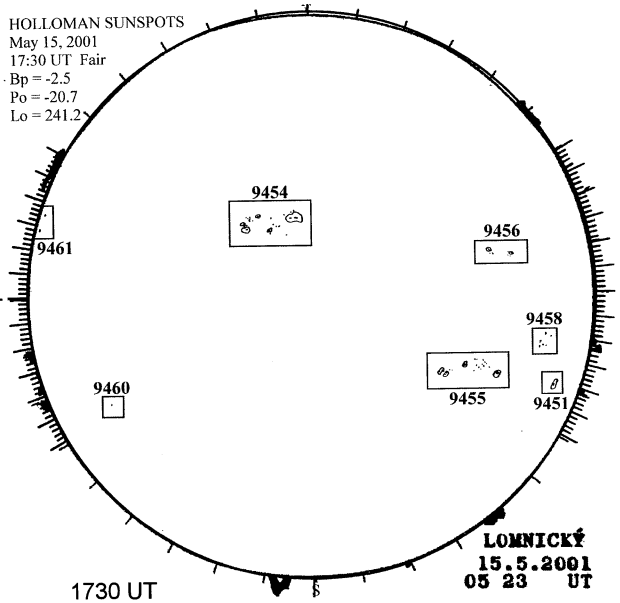

1730 UT
0523 UT LOMN Prom S

SACRAMENTO PEAK CORONA (1.15 Radii)----

NSO / SACRAMENTO PEAK CORONAL DATA
TICK MARKS EVERY 20 MILLIONTHS

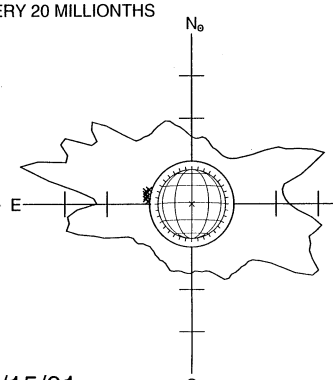

-------W

05/15/01
(DOY 135)

—— FE XIV 14:29 UT 1.15 R☉
xxxxx CA XV 15:36 UT 1.15 R☉

S