MAY 8, 2001 (P= -22.72, Bo = -3.43, Lo = 343.06)

KITT PEAK MAGNETOGRAM

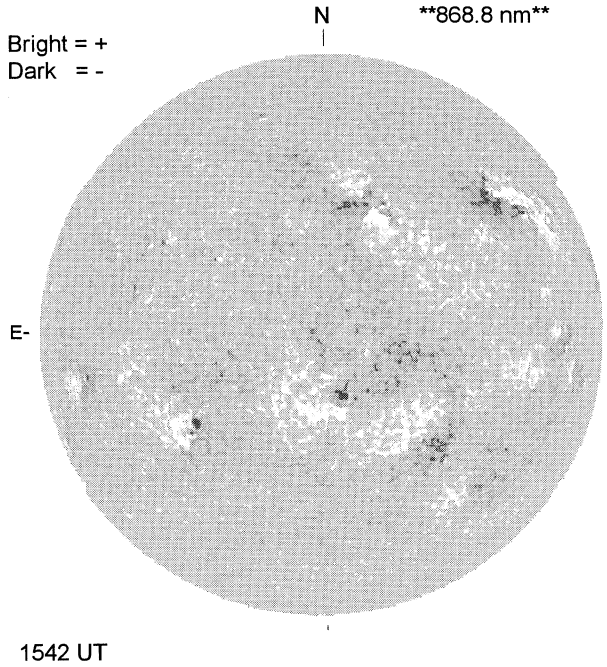

STANFORD MAGNETOGRAM

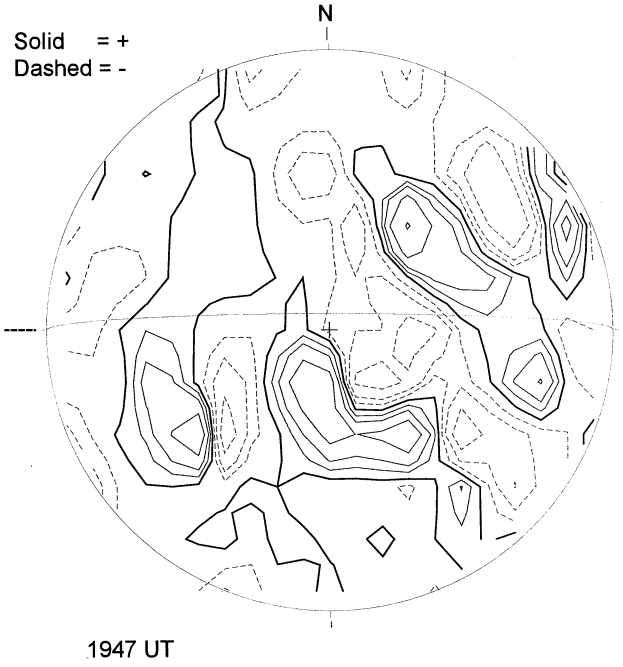

MT. WILSON MAGNETOGRAM

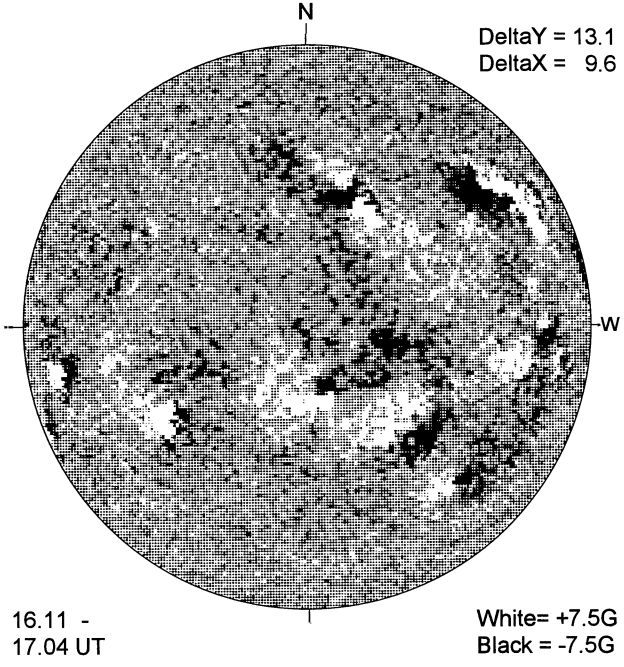

MEUDON H-ALPHA

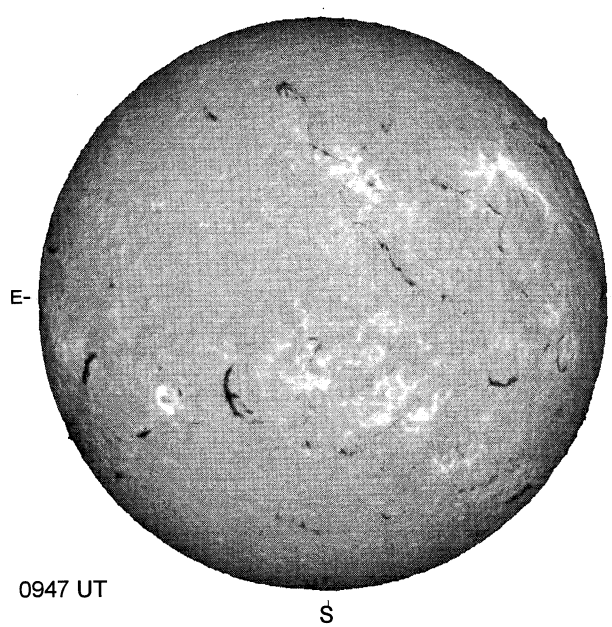

RAMEY SUNSPOT

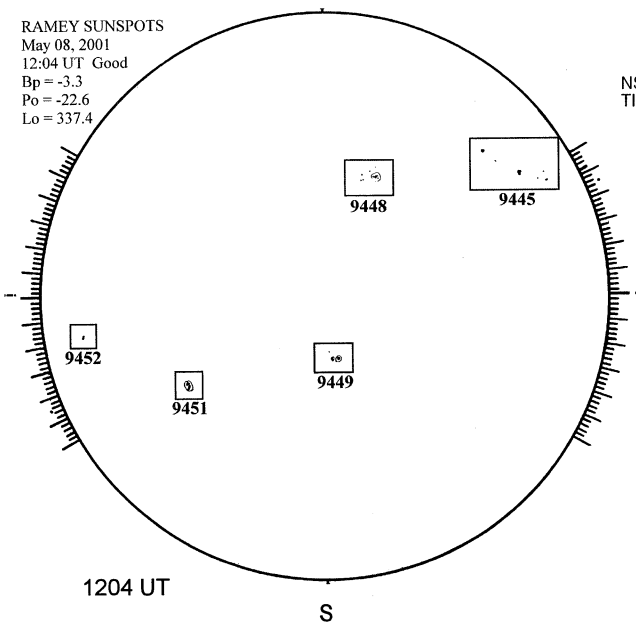
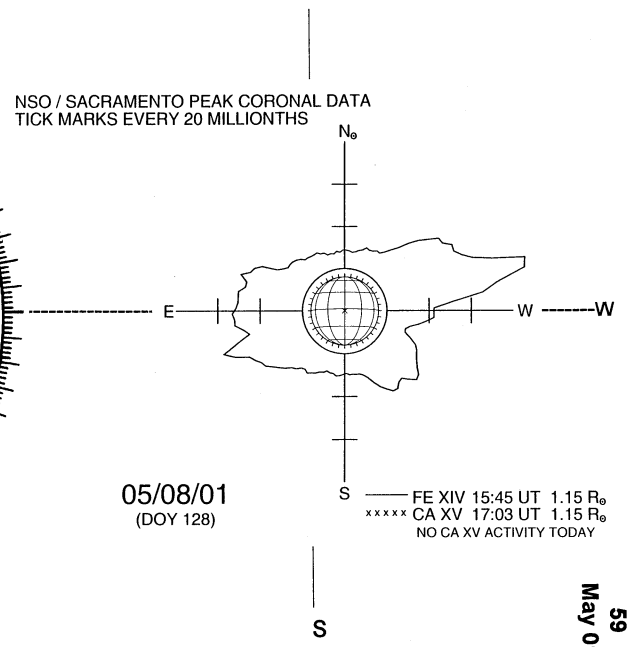
SACRAMENTO PEAK CORONA (1.15 Radii)----