MAY 7, 2001 (P= -22.95, Bo = -3.54, Lo = 356.28)

KITT PEAK MAGNETOGRAM

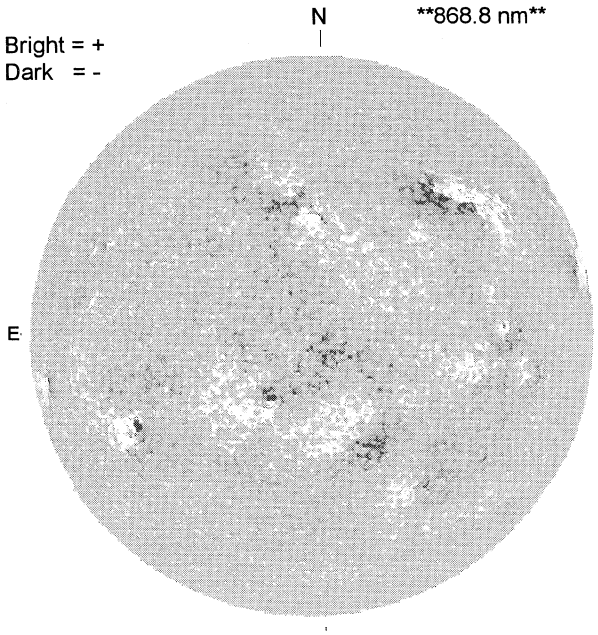

STANFORD MAGNETOGRAM

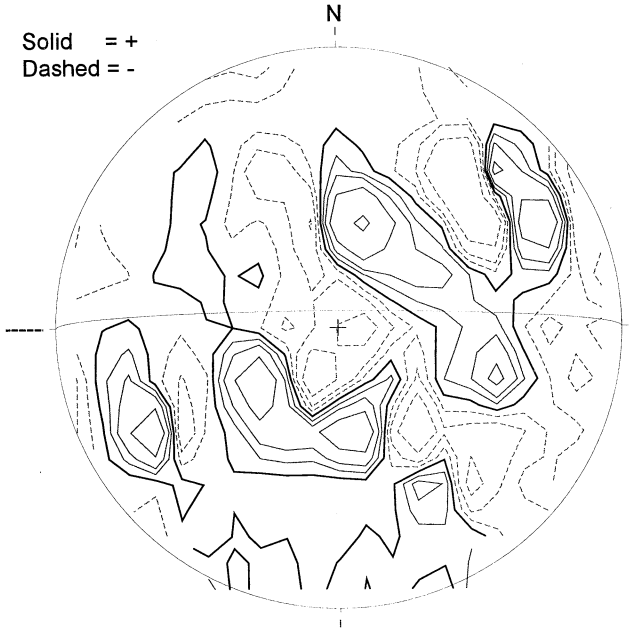

MT. WILSON MAGNETOGRAM

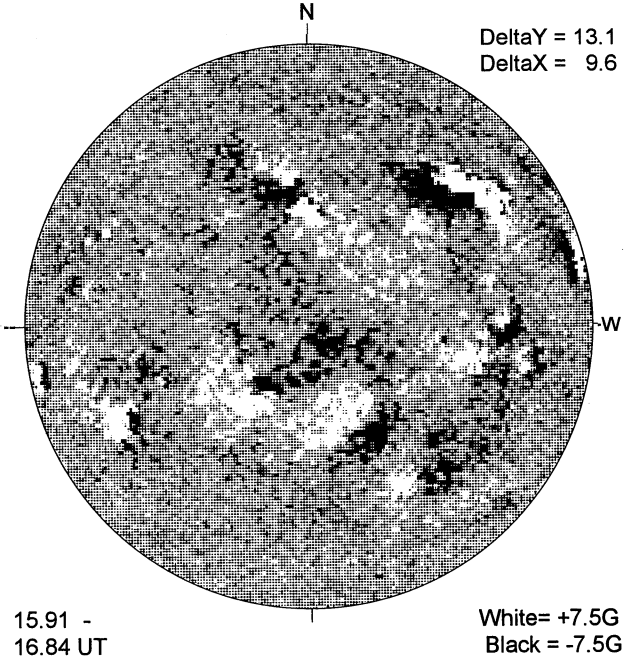

MEUDON H-ALPHA

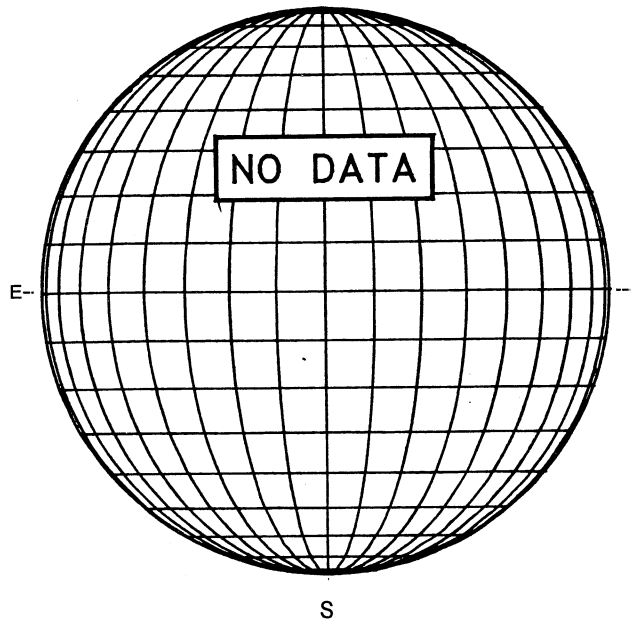

RAMEY SUNSPOTS

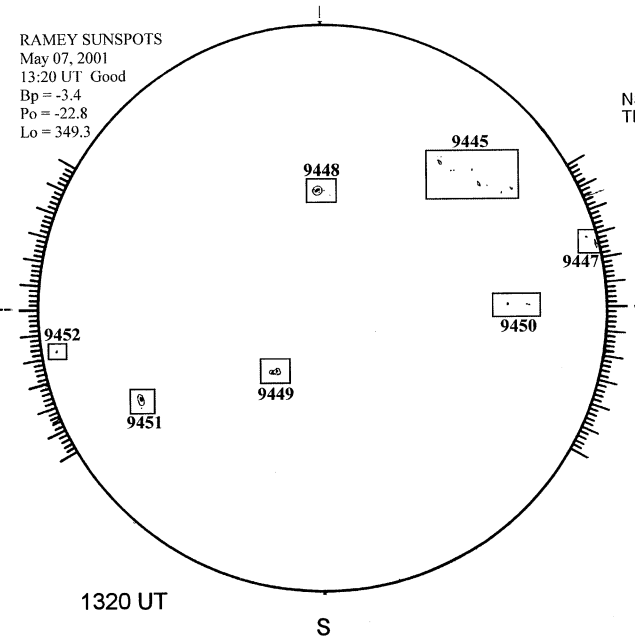
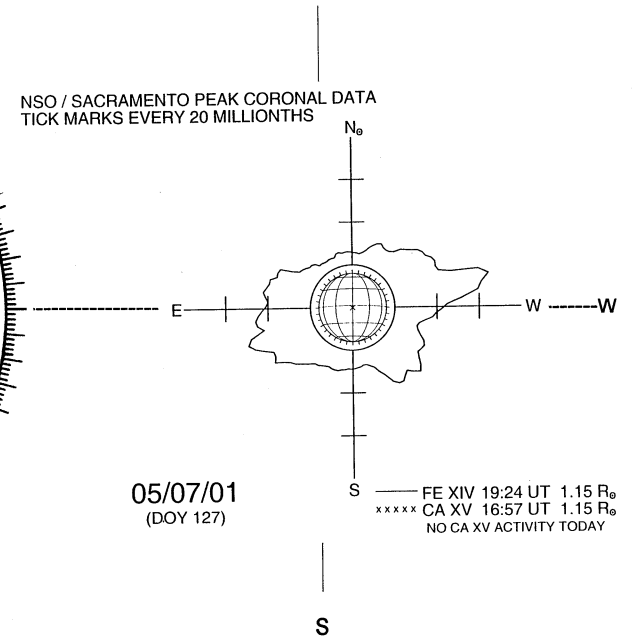
SACRAMENTO PEAK CORONA (1.15 Radii)