MAY 1, 2001 (P= -24.14, Bo = -4.16, Lo = 75.59)

KITT PEAK MAGNETOGRAM

N **868.8 nm**

Bright = +
Dark = -

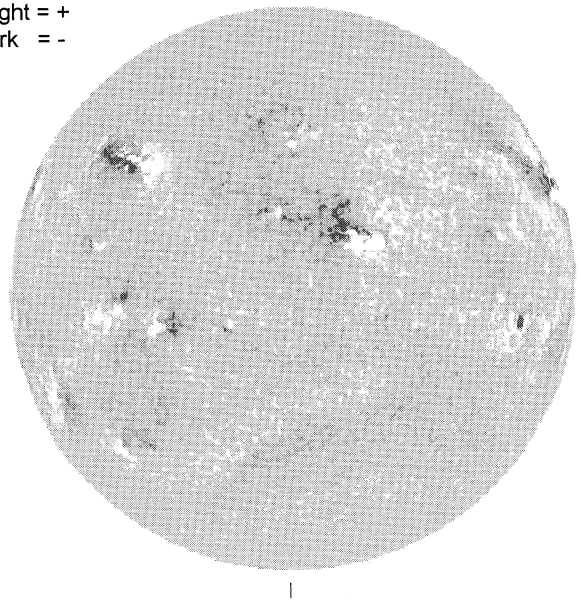

E--

1608 UT

STANFORD MAGNETOGRAM

N

Solid = +
Dashed = -

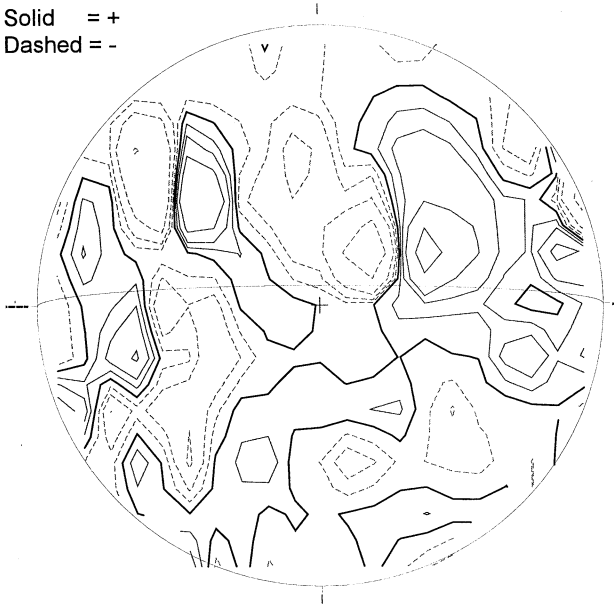

2116 UT

MT. WILSON MAGNETOGRAM

N

DeltaY = 13.1
DeltaX = 9.6

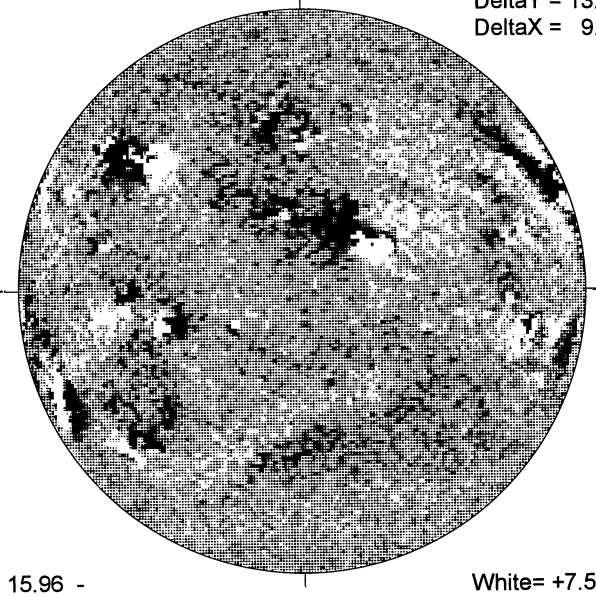

-W

15.96 -
16.89 UT

White= +7.5G
Black = -7.5G

MEUDON H-ALPHA

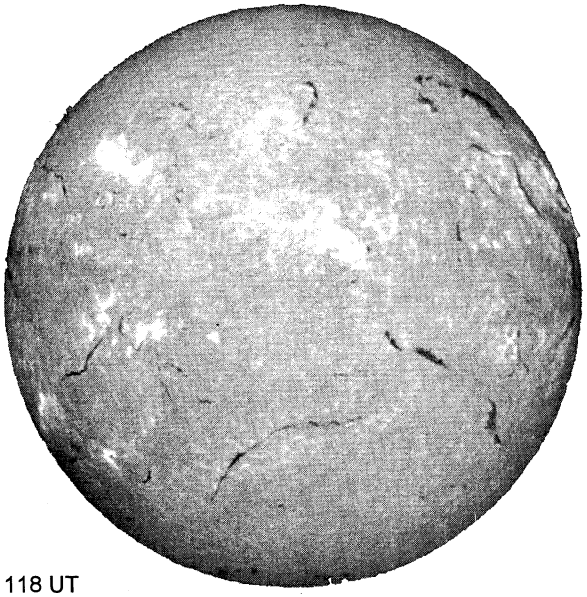

E

1118 UT

S

RAMEY SUNSPOT

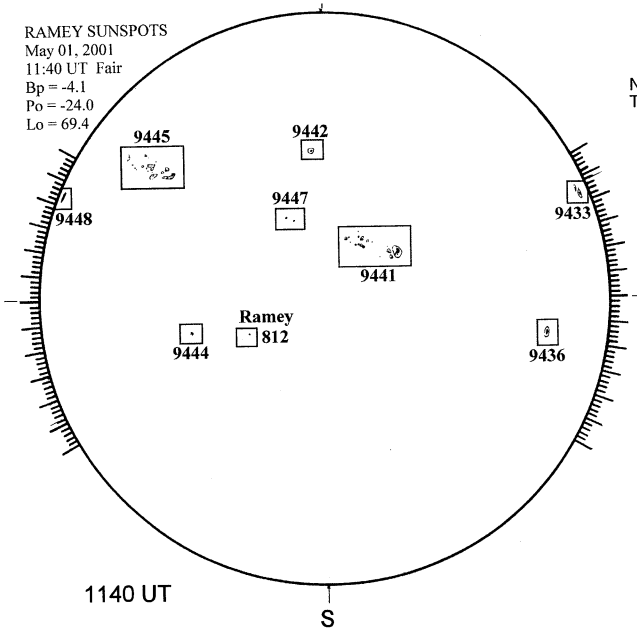

1140 UT

S

SACRAMENTO PEAK CORONA (1.15 Radii)----

NSO / SACRAMENTO PEAK CORONAL DATA
TICK MARKS EVERY 20 MILLIONTHS

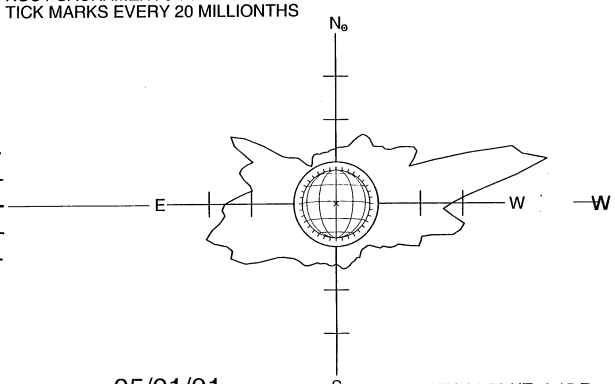

05/01/01
(DOY 121)

S