APRIL 30, 2001 (P= -24.31, Bo = -4.26, Lo = 88.81)

KITT PEAK MAGNETOGRAM

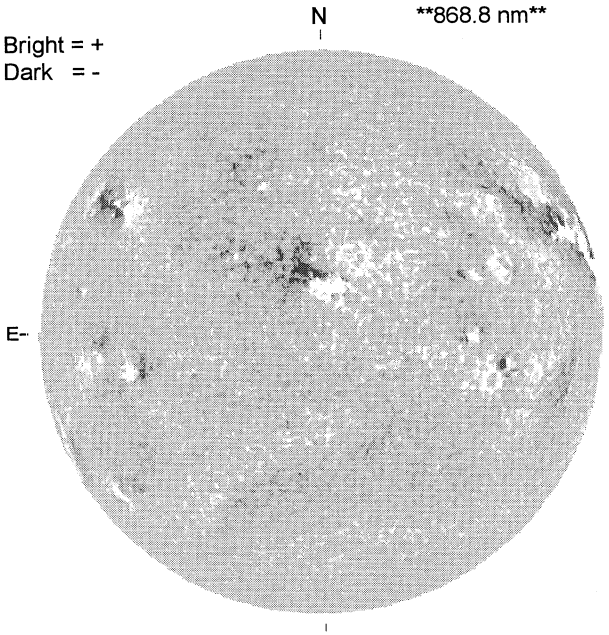

STANFORD MAGNETOGRAM

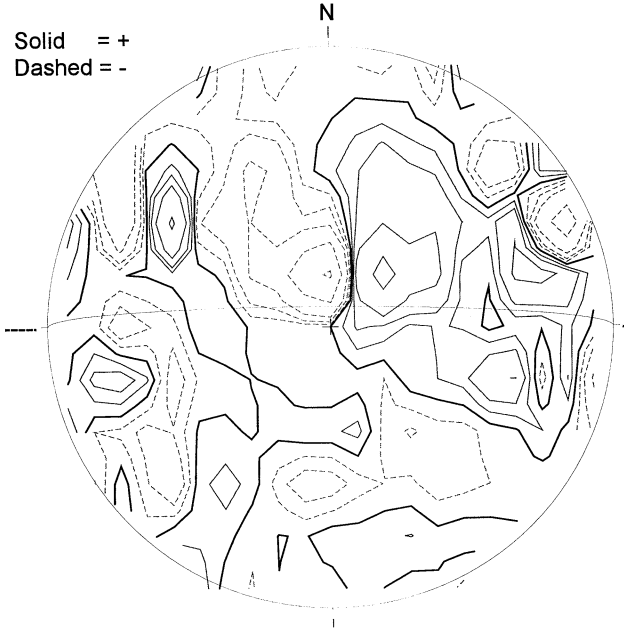

MT. WILSON MAGNETOGRAM

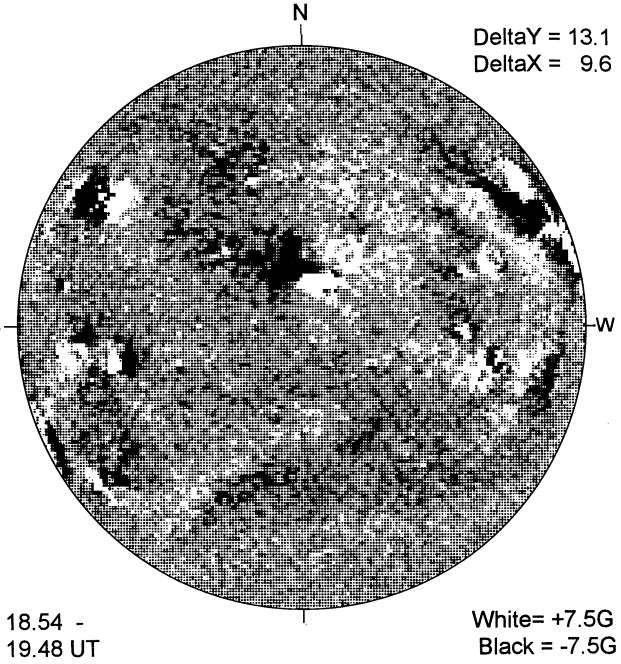

MEUDON H-ALPHA

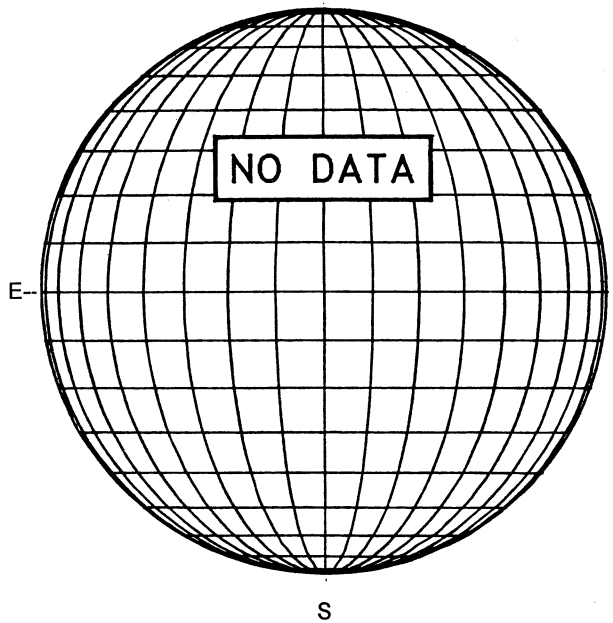

RAMEY SUNSPOT

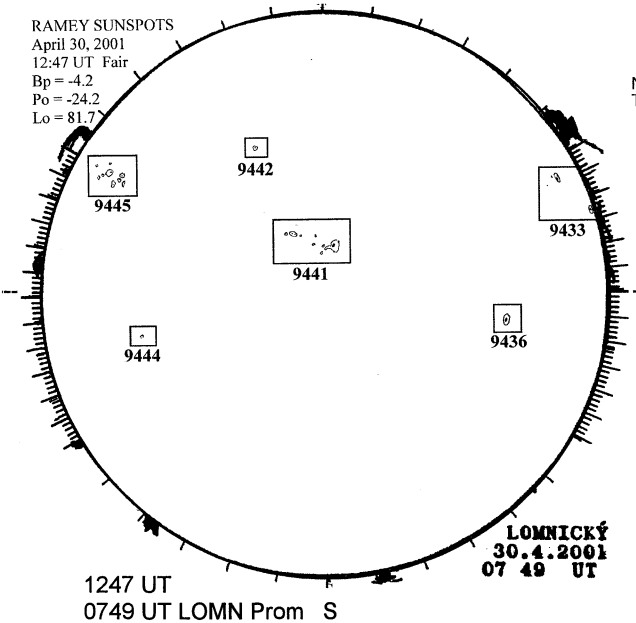

SACRAMENTO PEAK CORONA (1.15 Radii)----

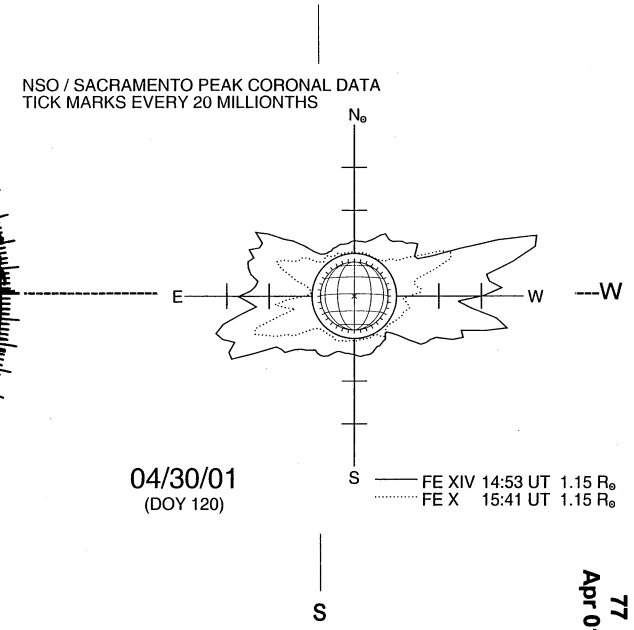

77
Apr 01