APRIL 25, 2001 (P= -25.08, Bo = -4.74, Lo = 154.88)

KITT PEAK MAGNETOGRAM

868.8 nm

Bright = +
Dark = -

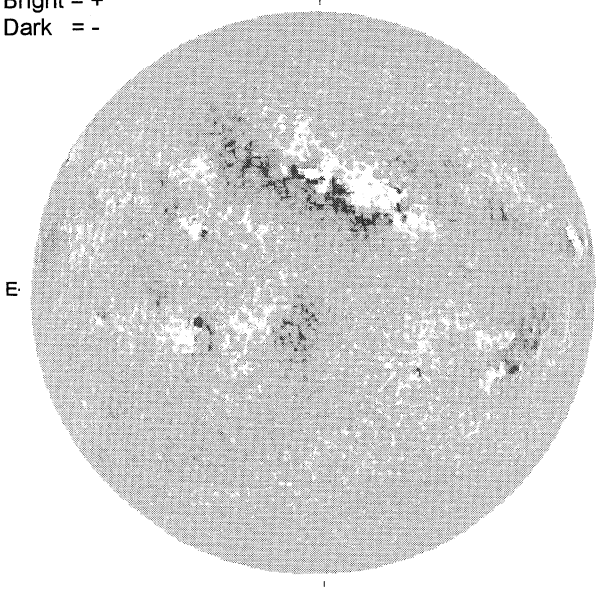

1436 UT

STANFORD MAGNETOGRAM

Solid = +
Dashed = -

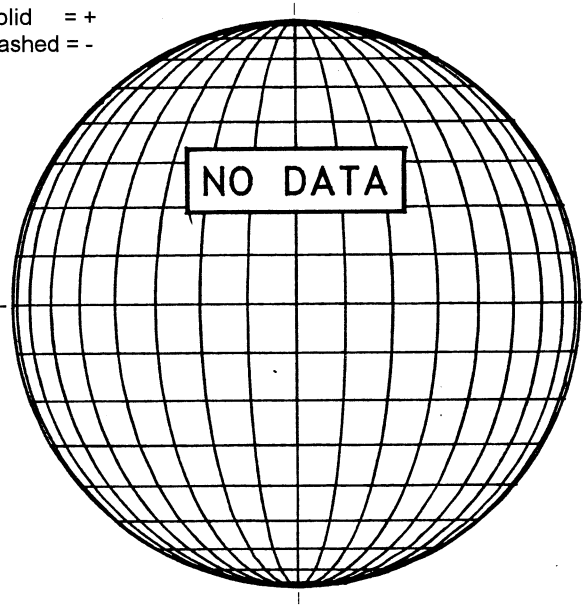

MT. WILSON MAGNETOGRAM

DeltaY = 13.1
DeltaX = 9.6

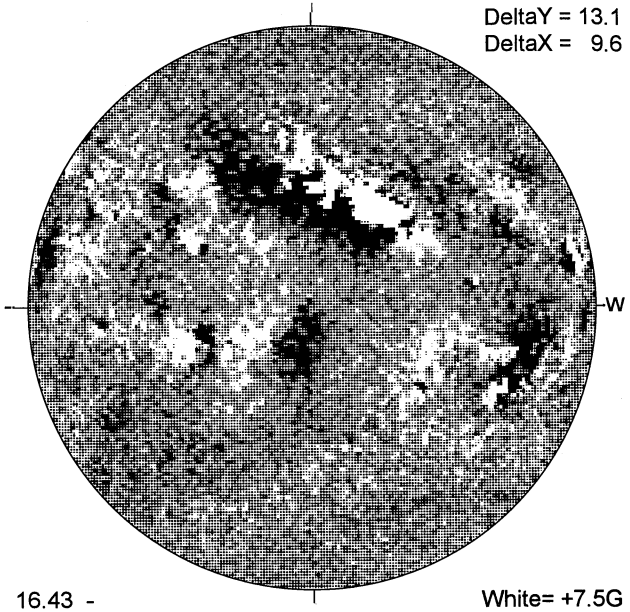

16.43 -
17.36 UT

White= +7.5G
Black = -7.5G

MEUDON H-ALPHA

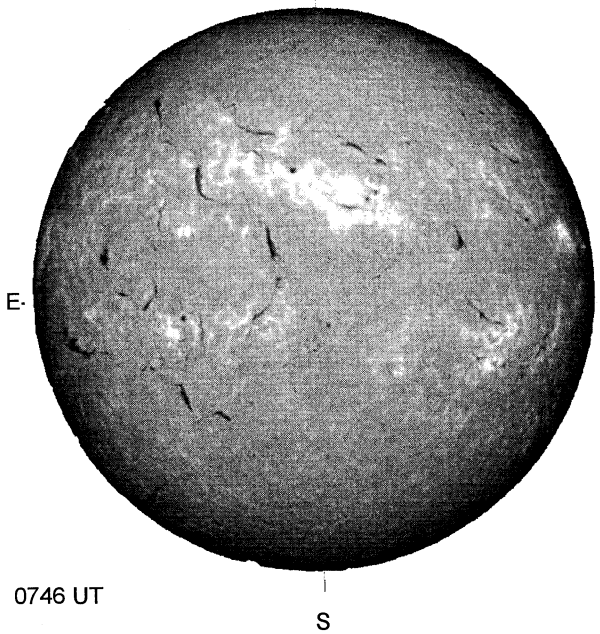

0746 UT

RAMEY SUNSPOT

RAMEY SUNSPOTS
April 25, 2001
11:00 UT Fair
Bp = -4.6
Po = -25.0
Lo = 148.7

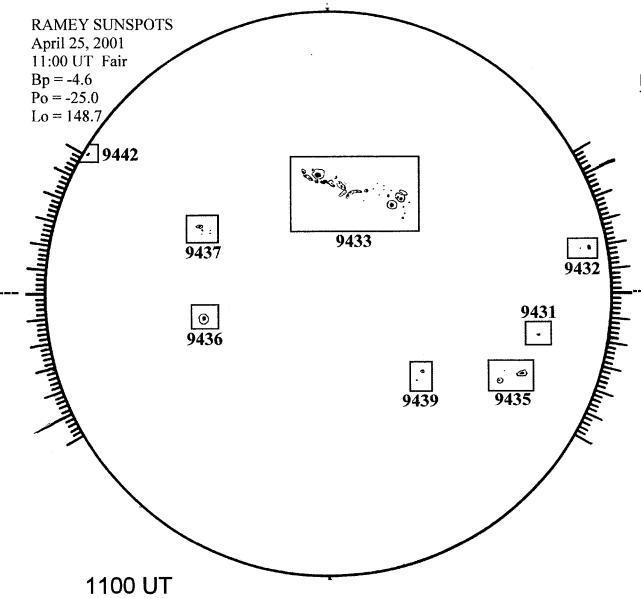

1100 UT

SACRAMENTO PEAK CORONA (1.15 Radii)

NSO / SACRAMENTO PEAK CORONAL DATA
TICK MARKS EVERY 20 MILLIONTHS

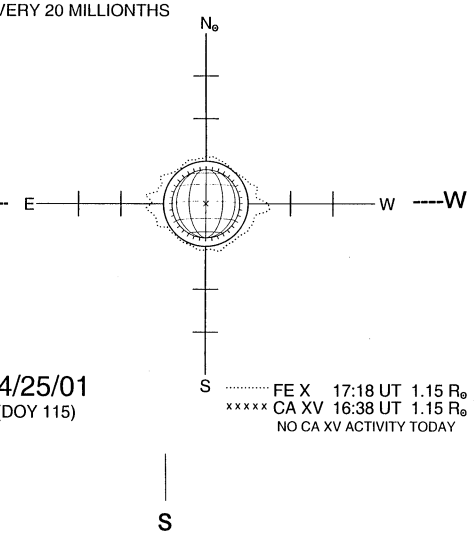

04/25/01
(DOY 115)

FE X 17:18 UT 1.15 R☉
CA XV 16:38 UT 1.15 R☉
NO CA XV ACTIVITY TODAY