# APRIL 23, 2001 ( P= -25.33, Bo = -4.93, Lo = 181.30)

## KITT PEAK MAGNETOGRAM

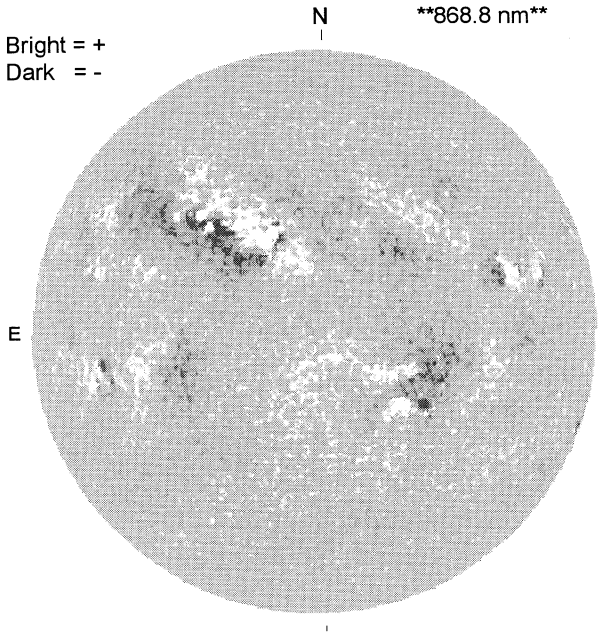


1553 UT

## STANFORD MAGNETOGRAM

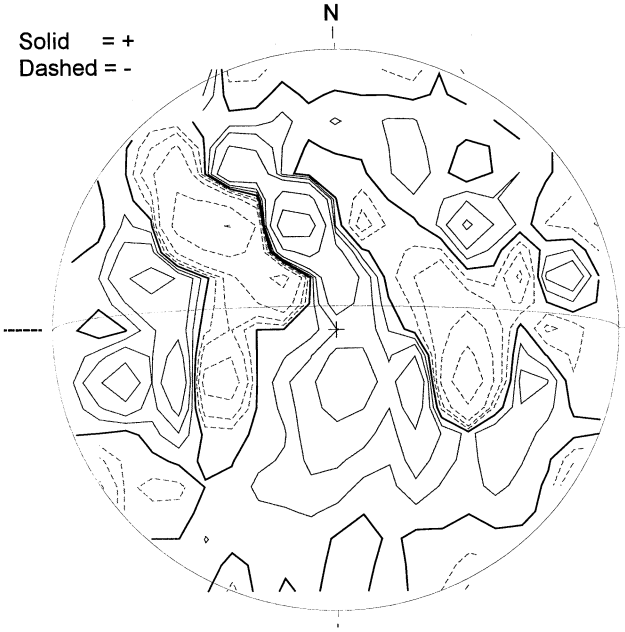


2105 UT

## MT. WILSON MAGNETOGRAM

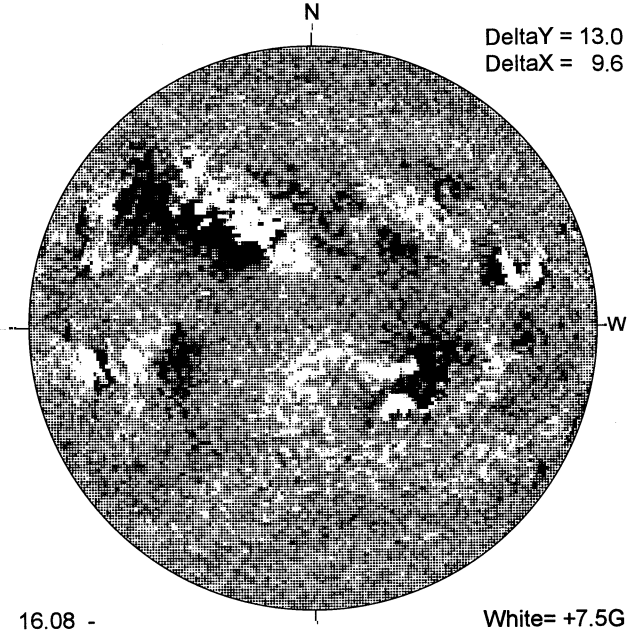


16.08 -
17.02 UT

White= +7.5G
Black = -7.5G

## MEUDON H-ALPHA

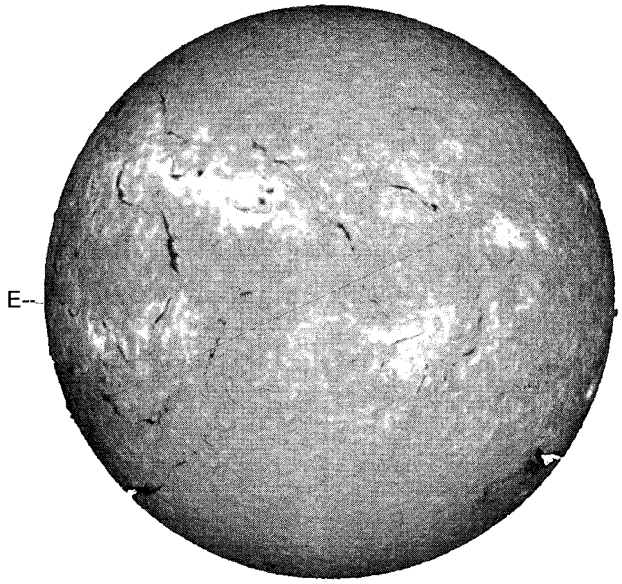


0956 UT

S

## RAMEY SUNSPOT

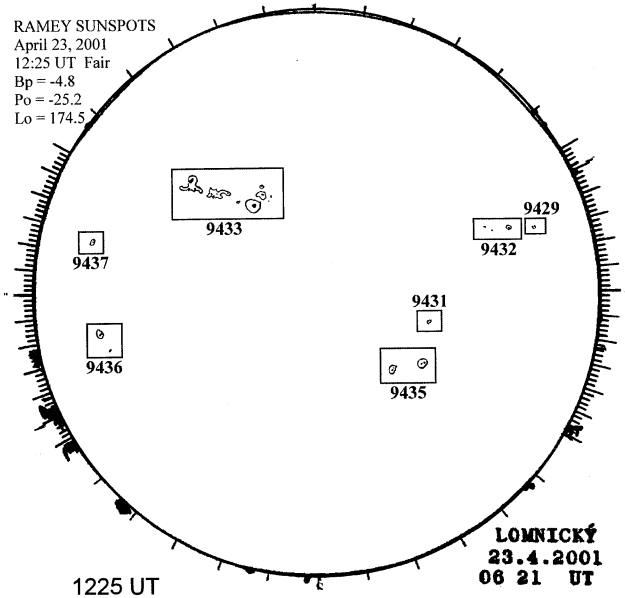


1225 UT
0621 UT LOMN Prom S

## SACRAMENTO PEAK CORONA (1.15 Radii)

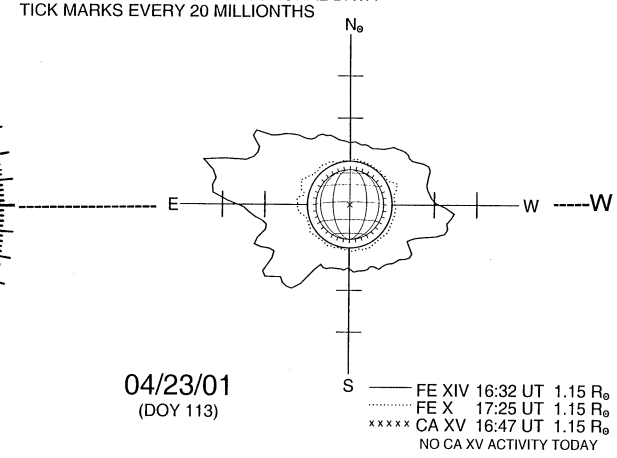


04/23/01
(DOY 113)

S