# APRIL 21, 2001 ( P= -25.55, Bo = -5.10, Lo = 207.72)

## KITT PEAK MAGNETOGRAM

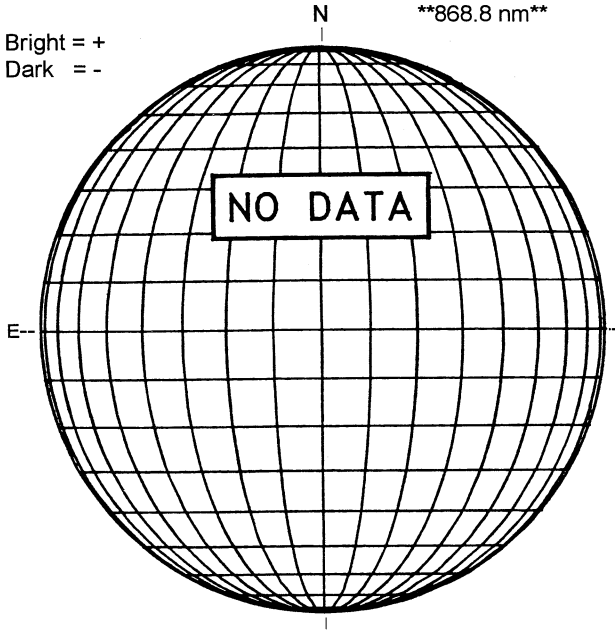


## STANFORD MAGNETOGRAM

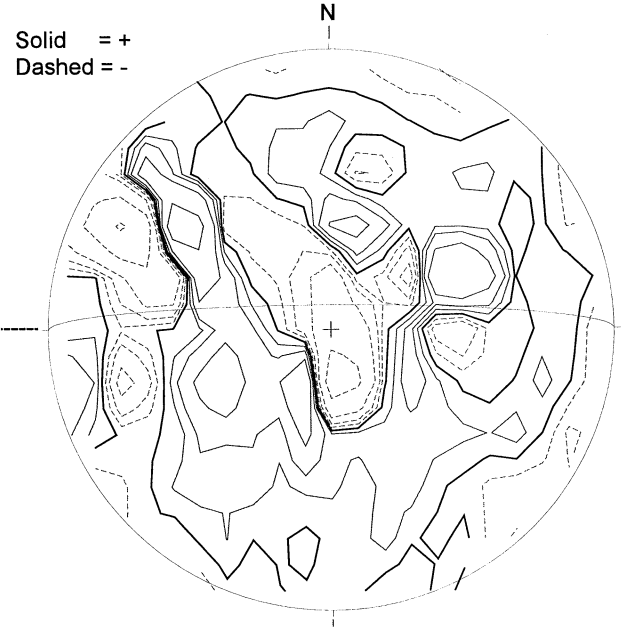


2158 UT

## MT. WILSON MAGNETOGRAM

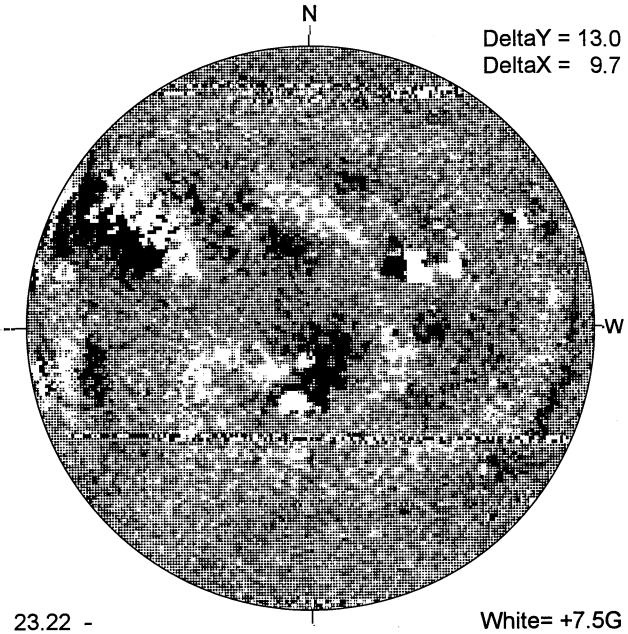


23.22 -
24.16 UT

White= +7.5G
Black = -7.5G

## MEUDON H-ALPHA

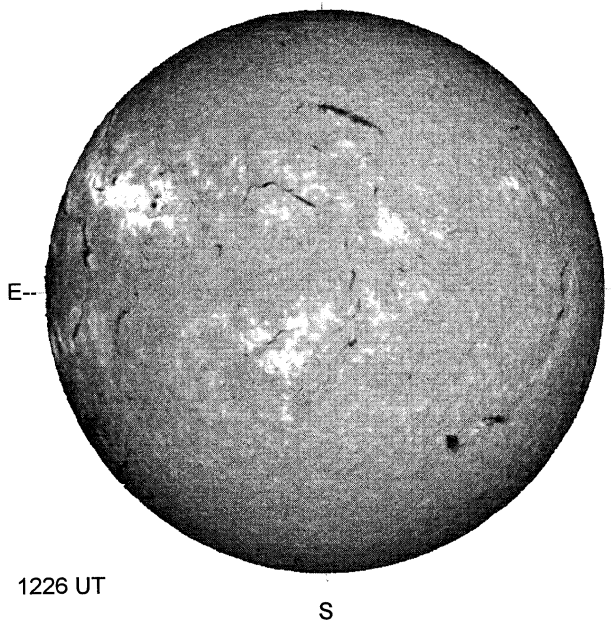


1226 UT

## RAMEY SUNSPOT

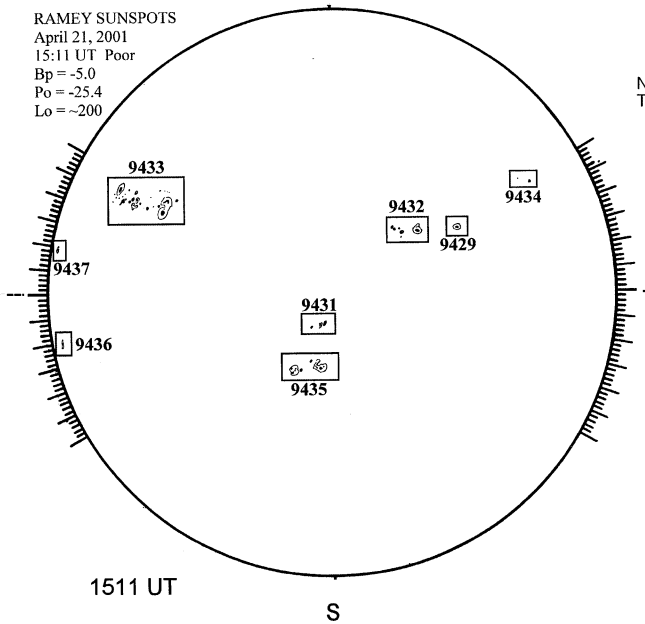


1511 UT

## SACRAMENTO PEAK CORONA (1.15 Radii)----

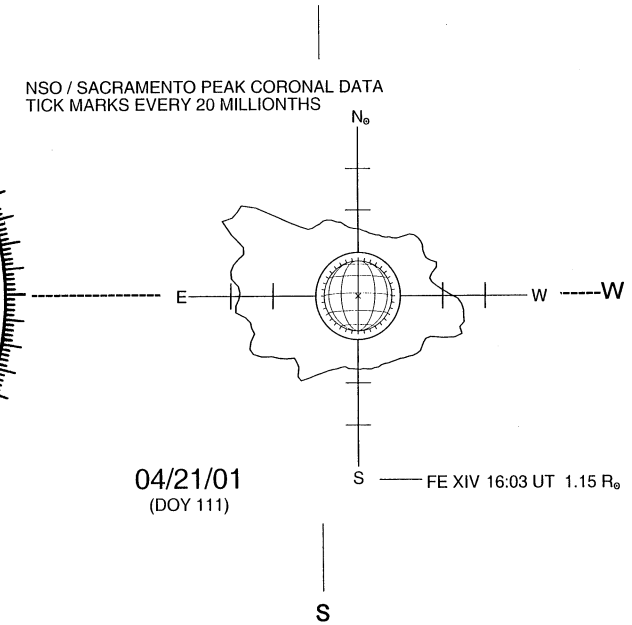


04/21/01
(DOY 111)