APRIL 19, 2001 (P= -25.75, Bo = -5.28, Lo = 234.13)

KITT PEAK MAGNETOGRAM

868.8 nm

Bright = +
Dark = -

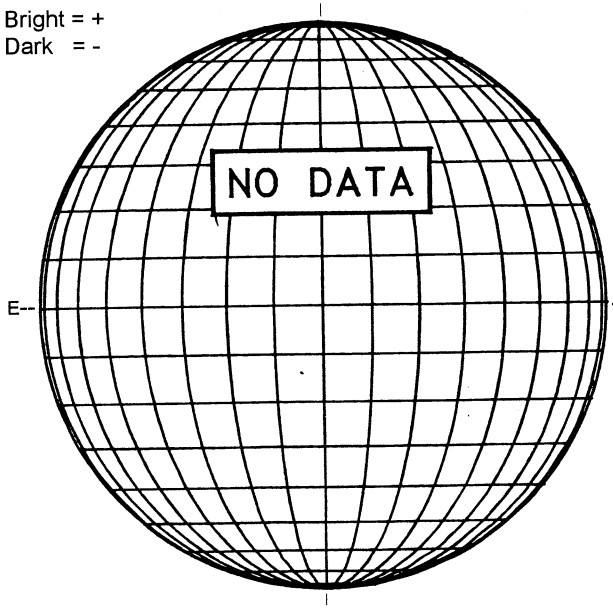

STANFORD MAGNETOGRAM

Solid = +
Dashed = -

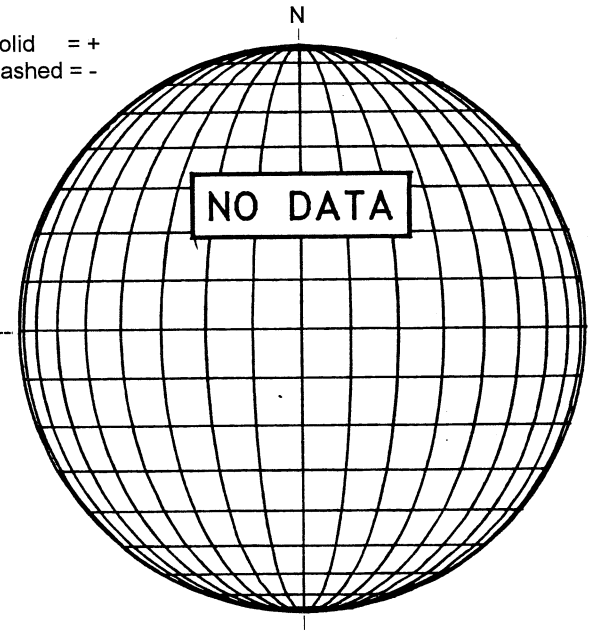

MT. WILSON MAGNETOGRAM

DeltaY = 13.1
DeltaX = 9.6

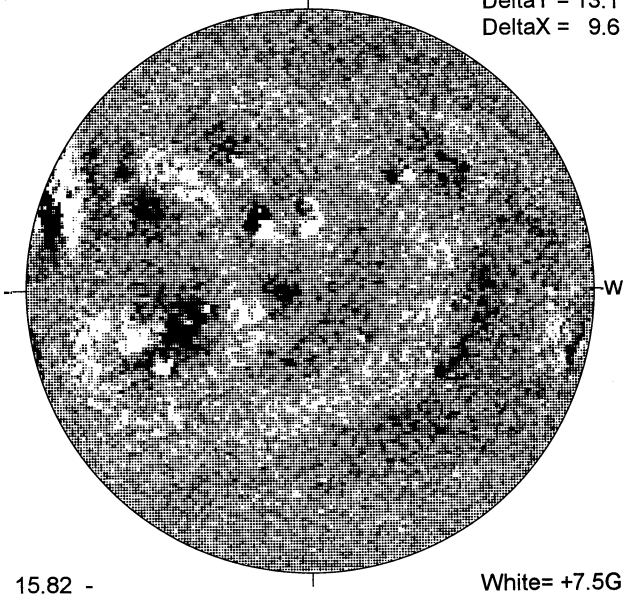

15.82 -
16.75 UT

White= +7.5G
Black = -7.5G

MEUDON H-ALPHA

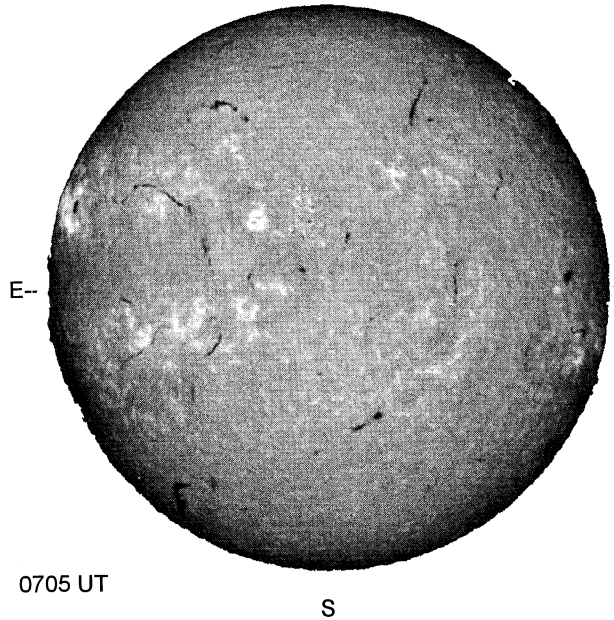

0705 UT

RAMEY SUNSPOT

RAMEY SUNSPOTS
April 19, 2001
14:00 UT Poor
Bp = -5.2
Po = -25.6
Lo = 226.4

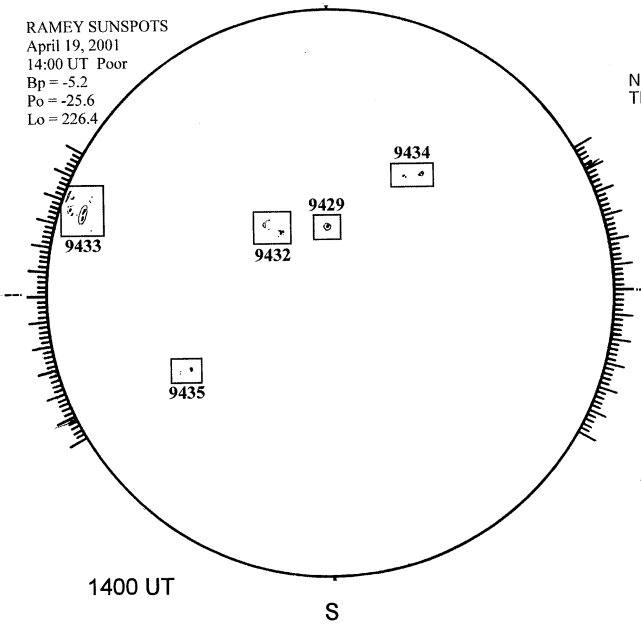

1400 UT

SACRAMENTO PEAK CORONA (1.15 Radii)----

NSO / SACRAMENTO PEAK CORONAL DATA
TICK MARKS EVERY 20 MILLIONTHS

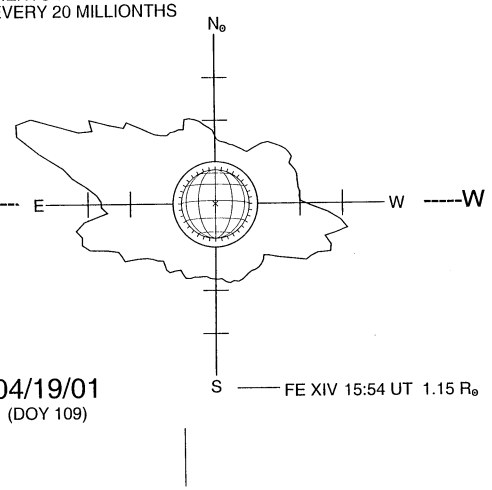

04/19/01
(DOY 109)