APRIL 16, 2001 (P= -25.98, Bo = -5.52, Lo = 273.75)

KITT PEAK MAGNETOGRAM

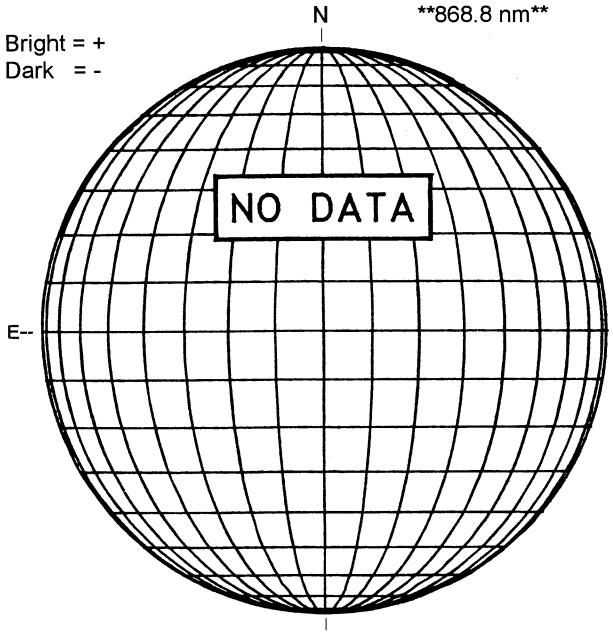

STANFORD MAGNETOGRAM

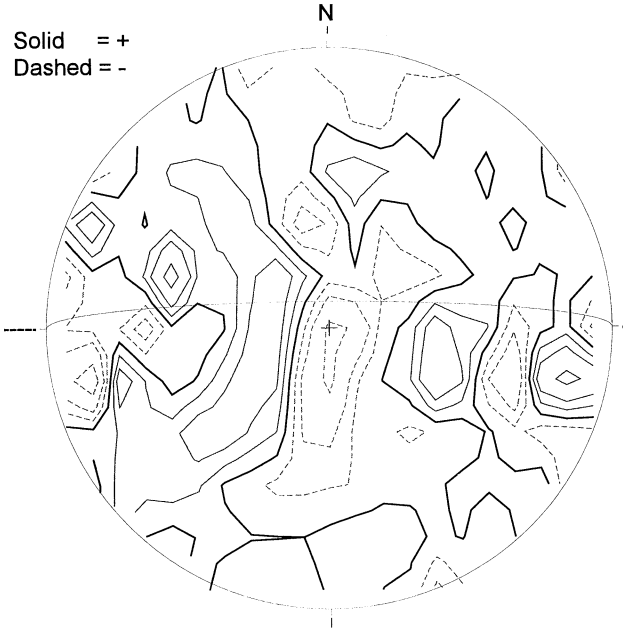

2118 UT

MT. WILSON MAGNETOGRAM

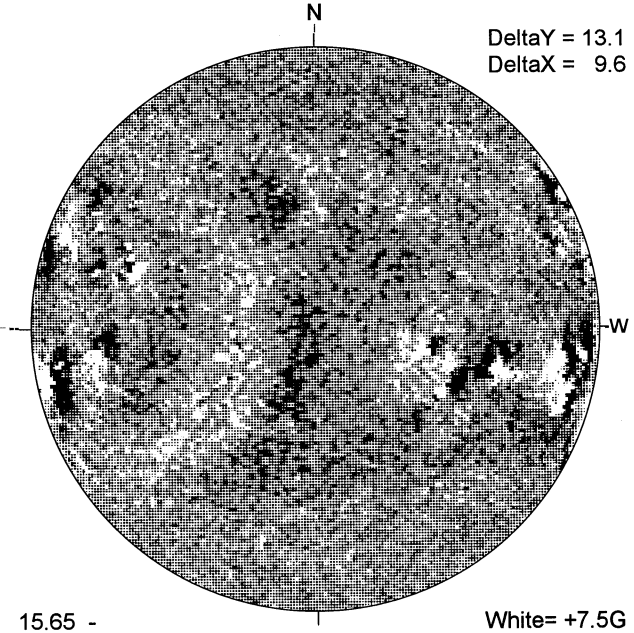

15.65 -
16.59 UT

White= +7.5G
Black = -7.5G

MEUDON H-ALPHA

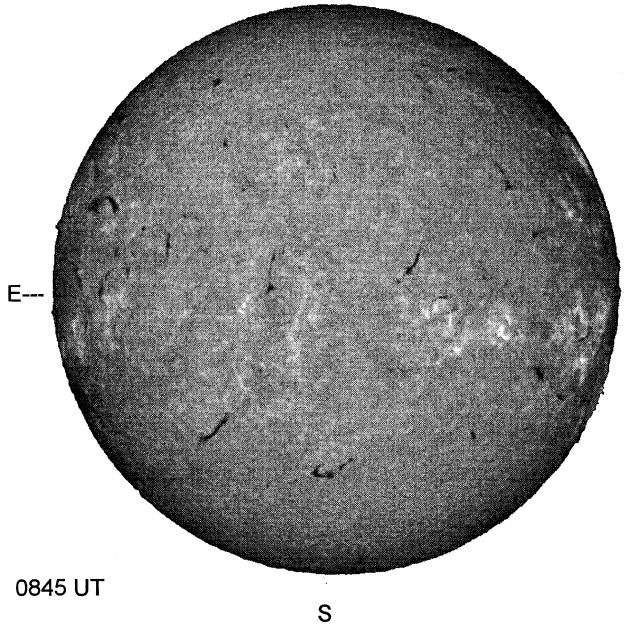

0845 UT

RAMEY SUNSPOT

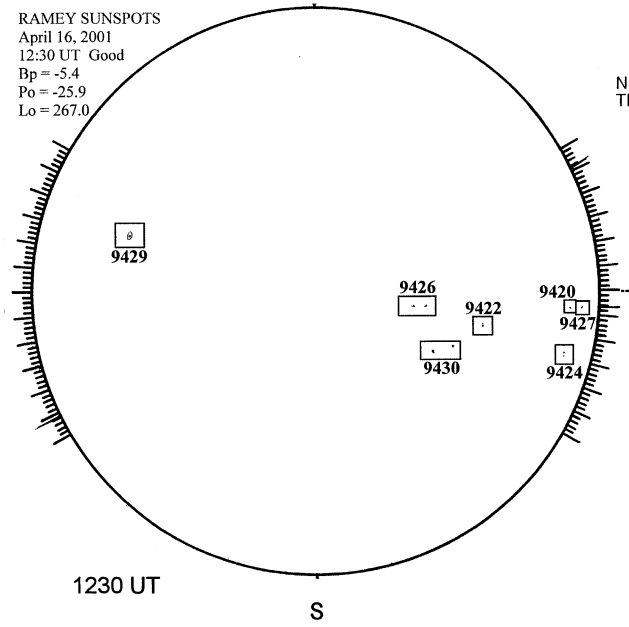

1230 UT
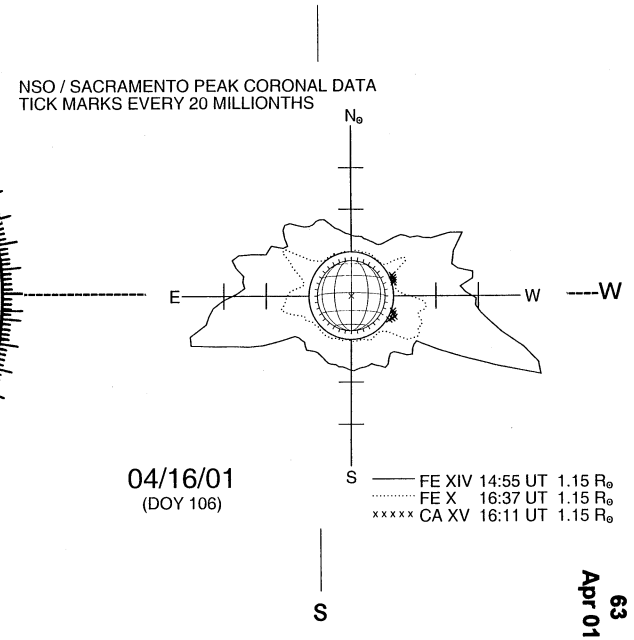
SACRAMENTO PEAK CORONA (1.15 Radii)----