APRIL 15, 2001 (P= -26.05, Bo = -5.60, Lo = 286.95)

KITT PEAK MAGNETOGRAM

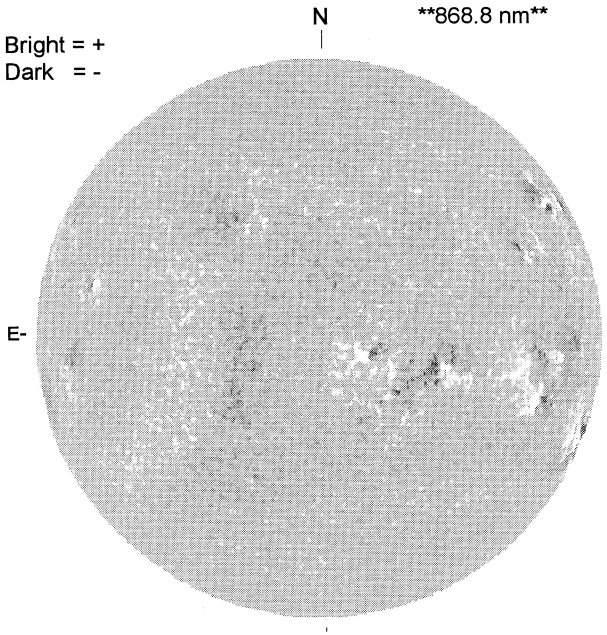

1522 UT

STANFORD MAGNETOGRAM

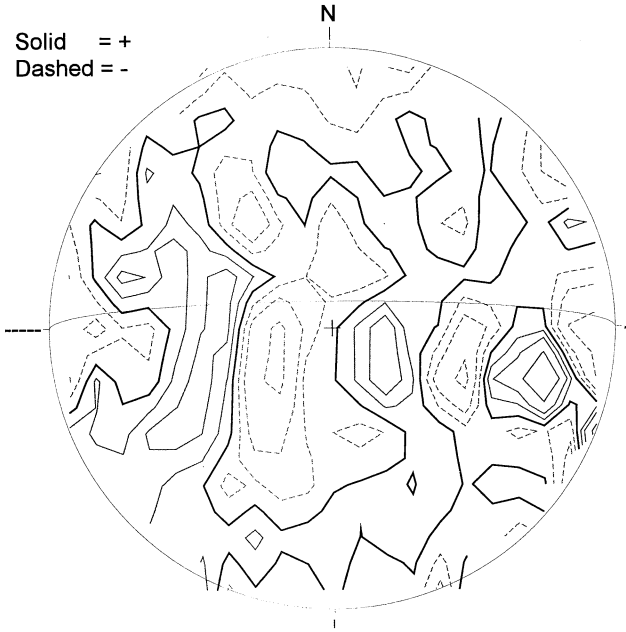

2146 UT

MT. WILSON MAGNETOGRAM

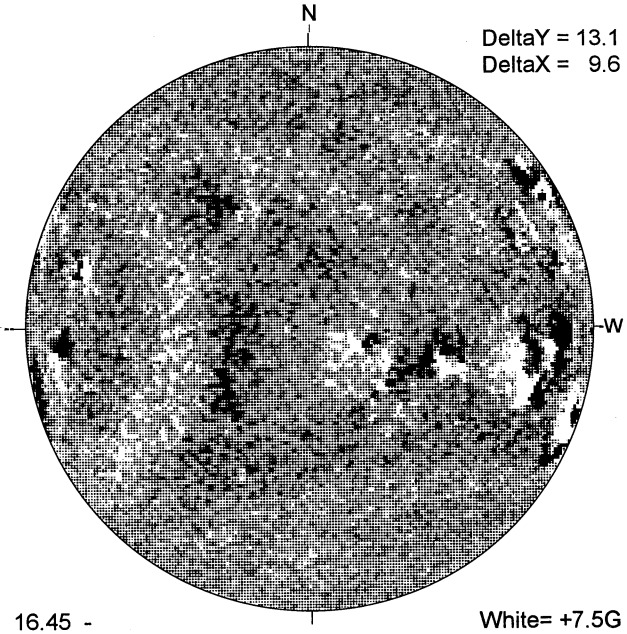

16.45 -
17.39 UT

White= +7.5G
Black = -7.5G

MEUDON H-ALPHA

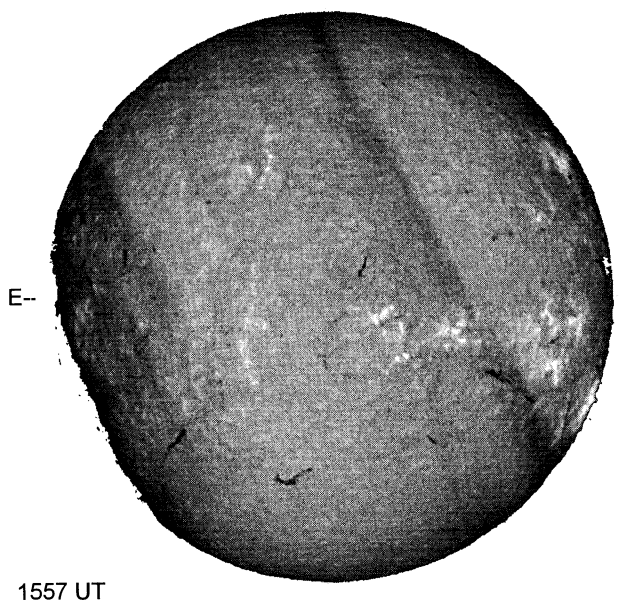

1557 UT

S

RAMEY SUNSPOT

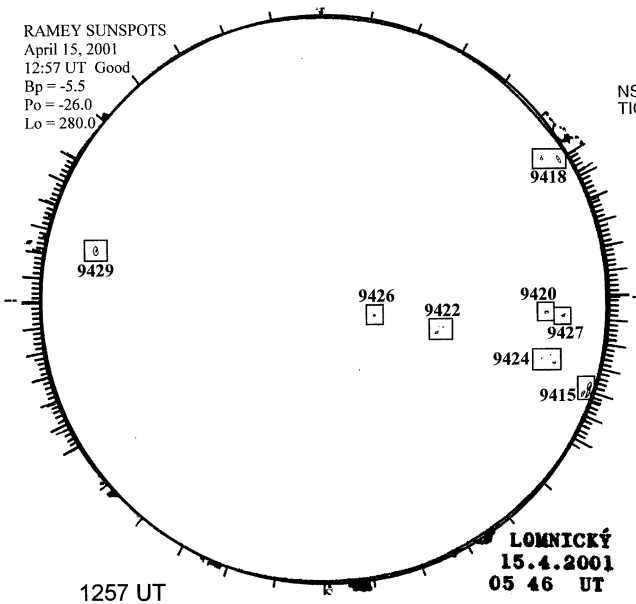

1257 UT
0546 UT LOMN Prom S

SACRAMENTO PEAK CORONA (1.15 Radii)----

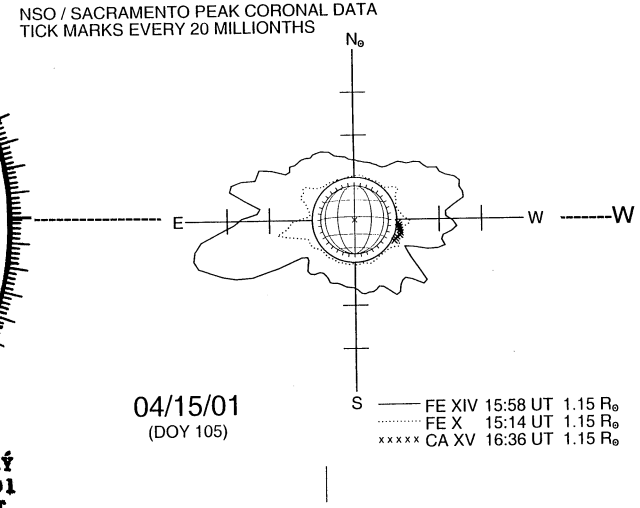

04/15/01
(DOY 105)

S