APRIL 13, 2001 (P= -26.15, Bo = -5.76, Lo = 313.36)

KITT PEAK MAGNETOGRAM

868.8 nm

Bright = +
Dark = -

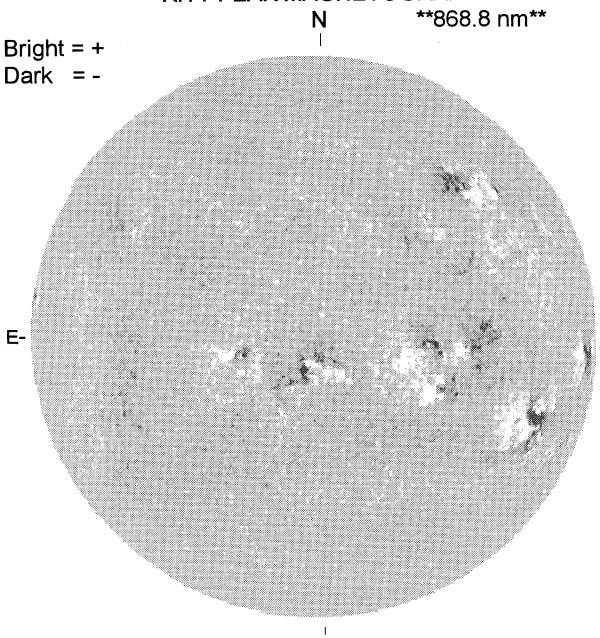

1419 UT

STANFORD MAGNETOGRAM

Solid = +
Dashed = -

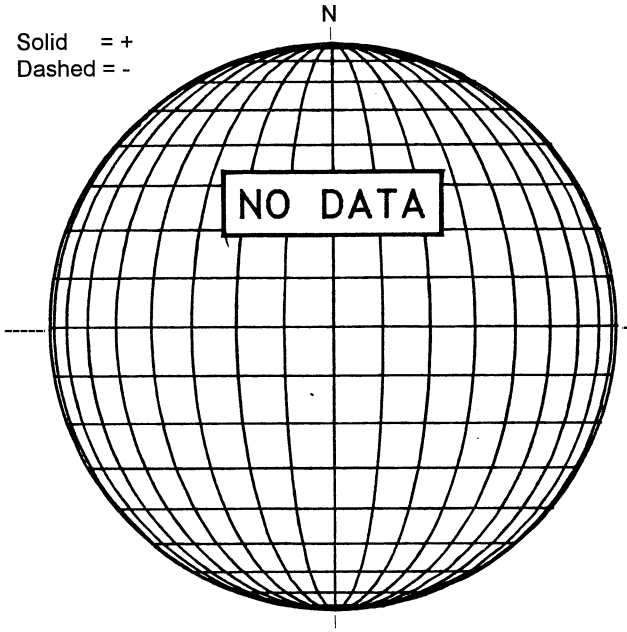

MT. WILSON MAGNETOGRAM

DeltaY = 13.0
DeltaX = 9.6

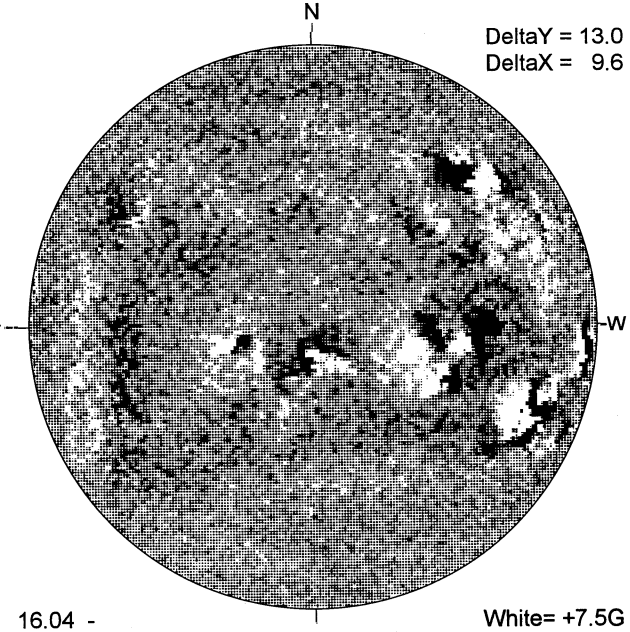

16.04 -
16.98 UT

White= +7.5G
Black = -7.5G

MEUDON H-ALPHA

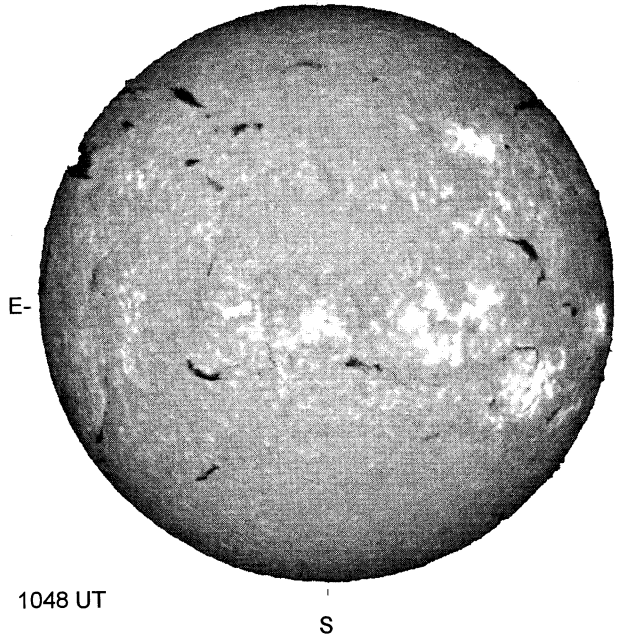

1048 UT

RAMEY SUNSPOT

RAMEY SUNSPOTS
April 13, 2001
13:20 UT Poor
Bp = -5.7
Po = -26.1
Lo = 306.8

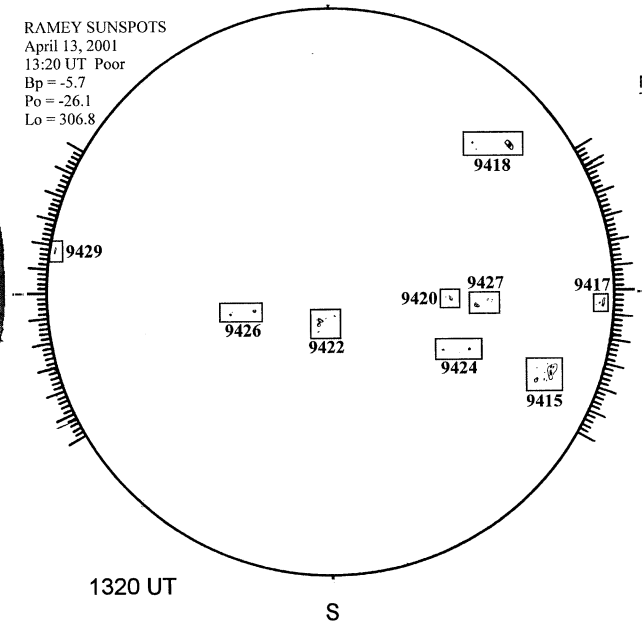

1320 UT

SACRAMENTO PEAK CORONA (1.15 Radii)

NSO / SACRAMENTO PEAK CORONAL DATA
TICK MARKS EVERY 20 MILLIONTHS

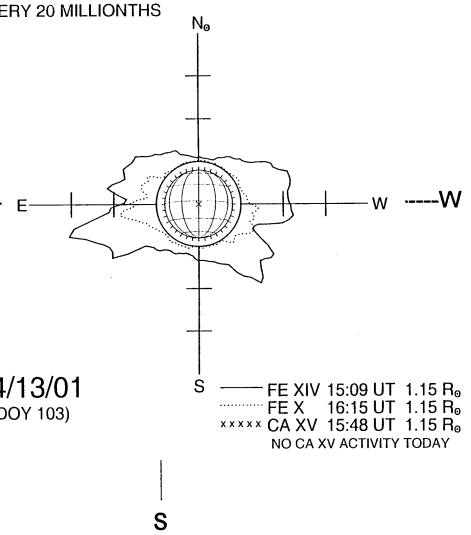

04/13/01
(DOY 103)

FE XIV 15:09 UT 1.15 R☉
FE X 16:15 UT 1.15 R☉
CA XV 15:48 UT 1.15 R☉
NO CA XV ACTIVITY TODAY

S