APRIL 7, 2001 (P= -26.29, Bo = -6.18, Lo = 32.56)

KITT PEAK MAGNETOGRAM

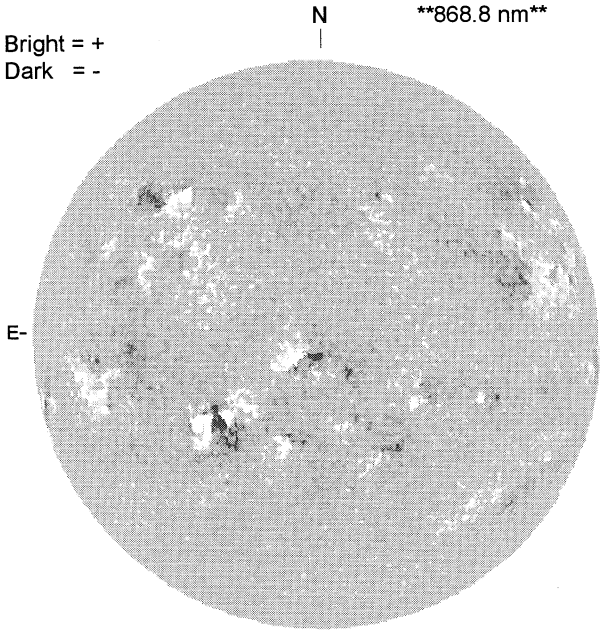

1733 UT

STANFORD MAGNETOGRAM

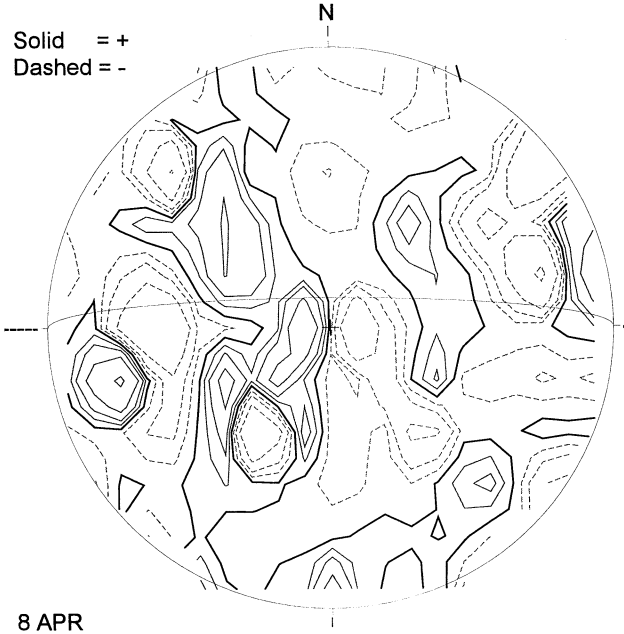

8 APR
0006 UT

MT. WILSON MAGNETOGRAM

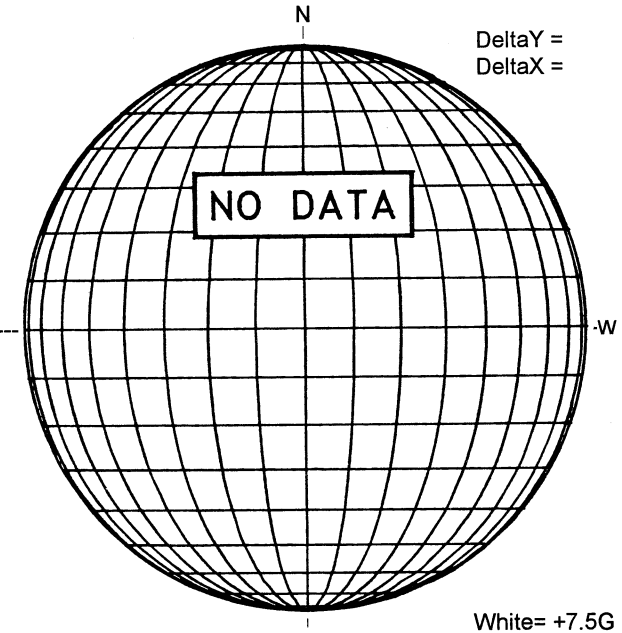

White= +7.5G
Black = -7.5G

MEUDON H-ALPHA

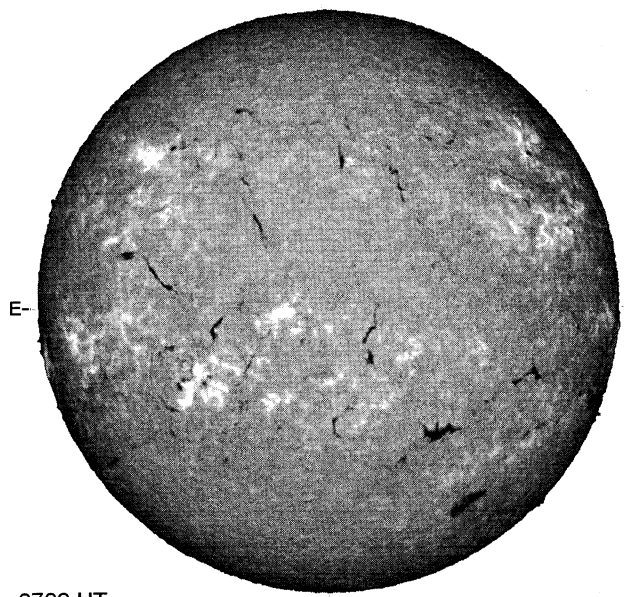

0706 UT

S

RAMEY SUNSPOTS

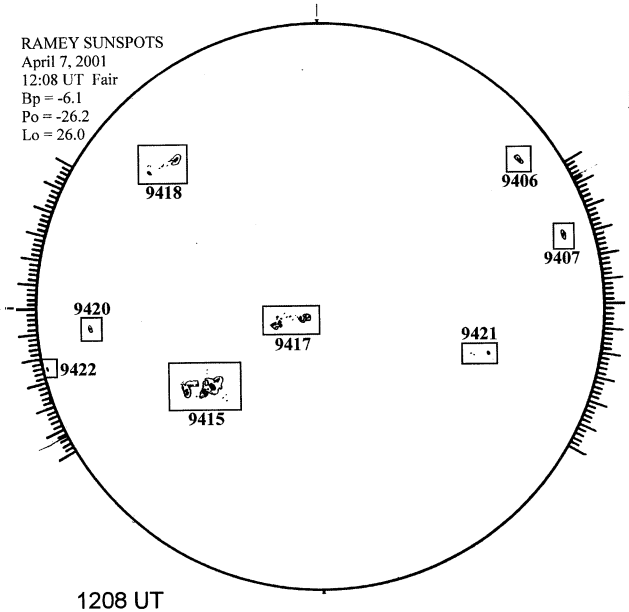

1208 UT

S

SACRAMENTO PEAK CORONA (1.15 Radii)----

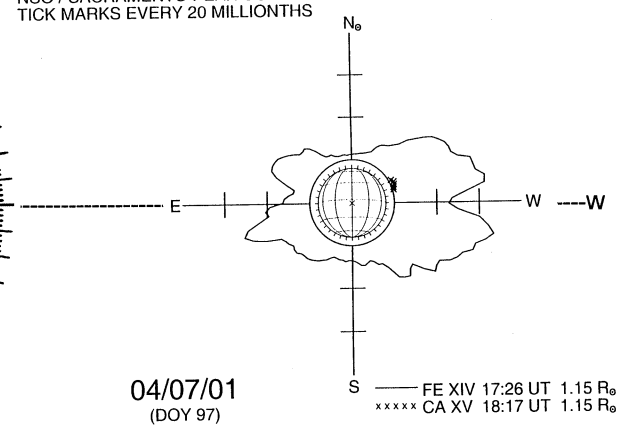

04/07/01
(DOY 97)

S