APRIL 3, 2001 (P= -26.24, Bo = -6.43, Lo = 85.34)

KITT PEAK MAGNETOGRAM

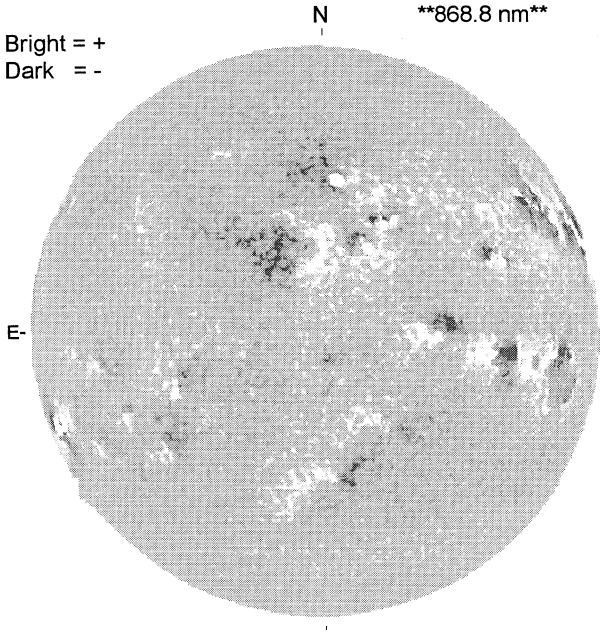

STANFORD MAGNETOGRAM

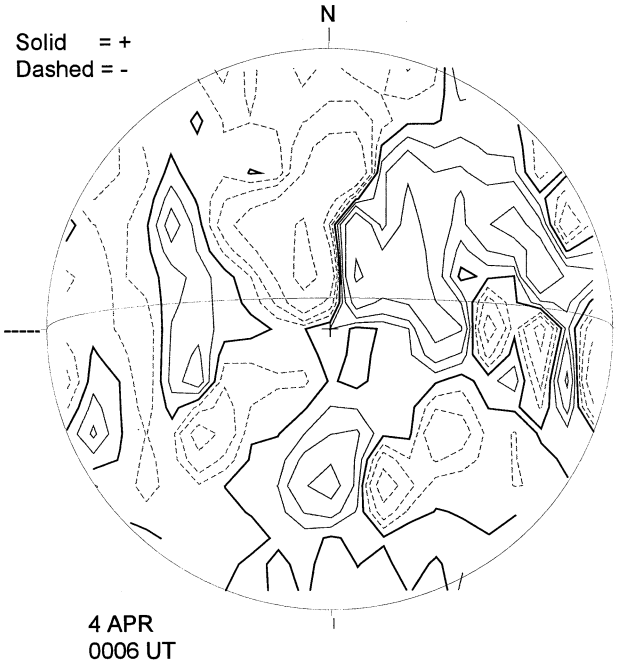

MT. WILSON MAGNETOGRAM

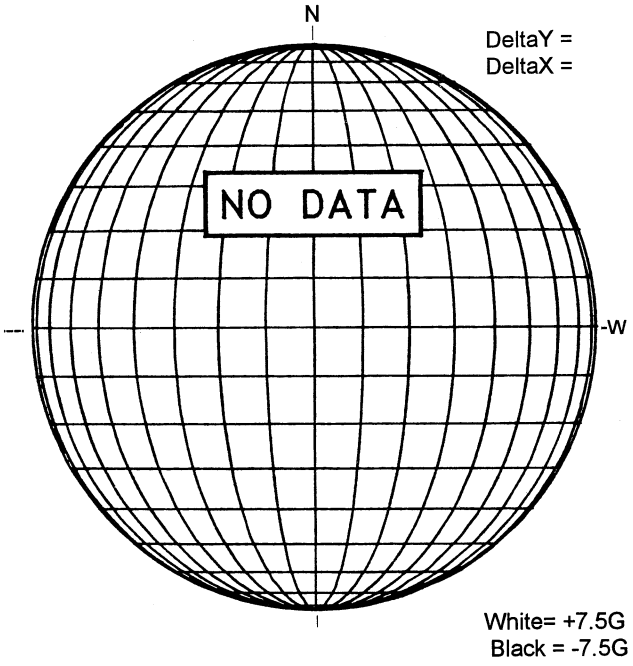

MEUDON H-ALPHA

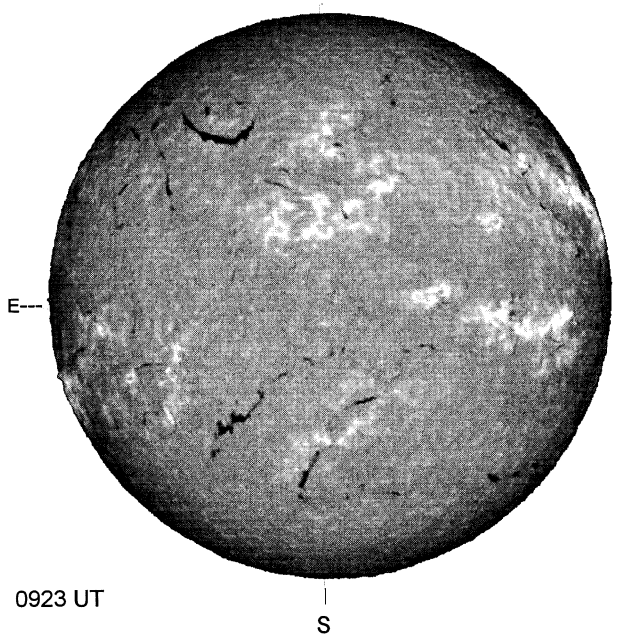

RAMEY SUNSPOT

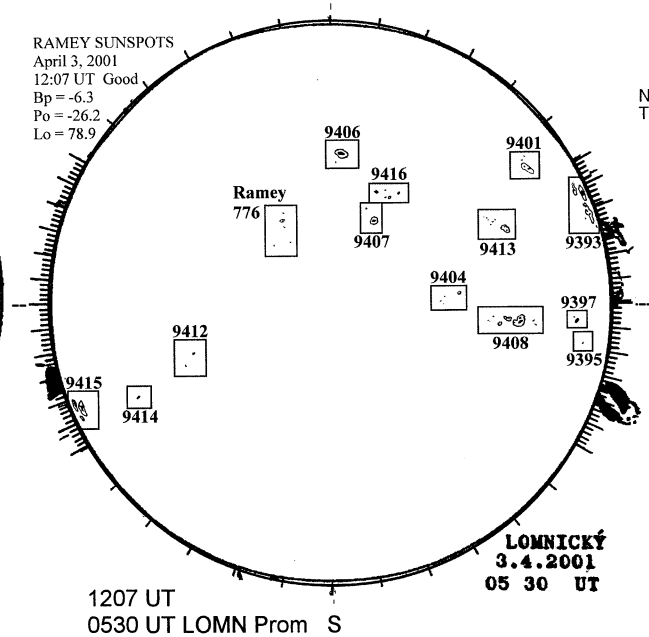
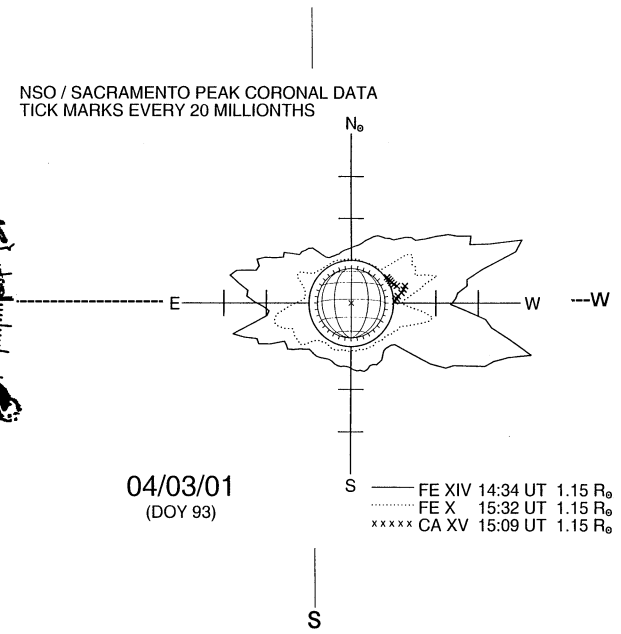
SACRAMENTO PEAK CORONA (1.15 Radii)----