**MARCH 30, 2001 ( P= -26.07, Bo = -6.64, Lo = 138.11)**

KITT PEAK MAGNETOGRAM

N

**868.8 nm**

Bright = +
Dark = -

E--

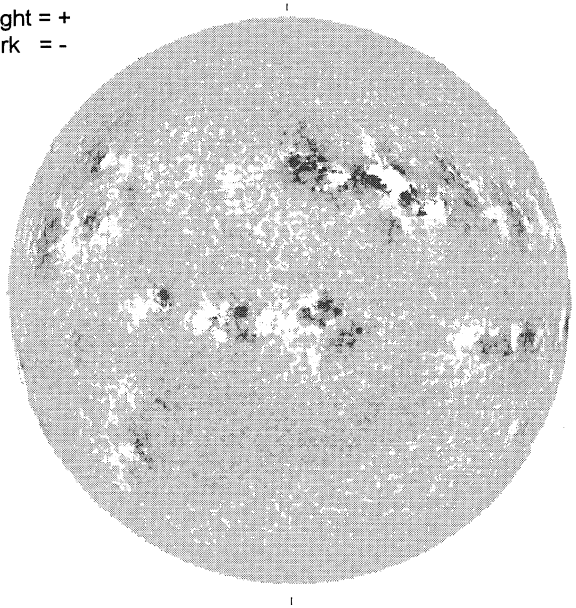

1440 UT

STANFORD MAGNETOGRAM

N

Solid = +
Dashed = -

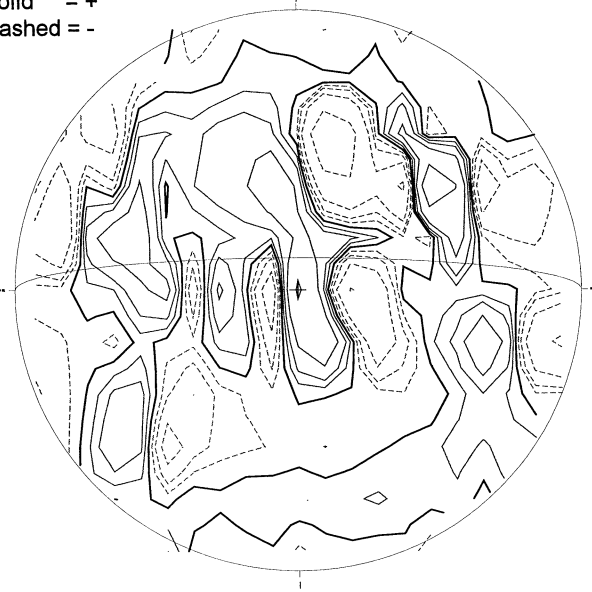

2158 UT

MT. WILSON MAGNETOGRAM

N

DeltaY = 13.1
DeltaX = 9.6

-W

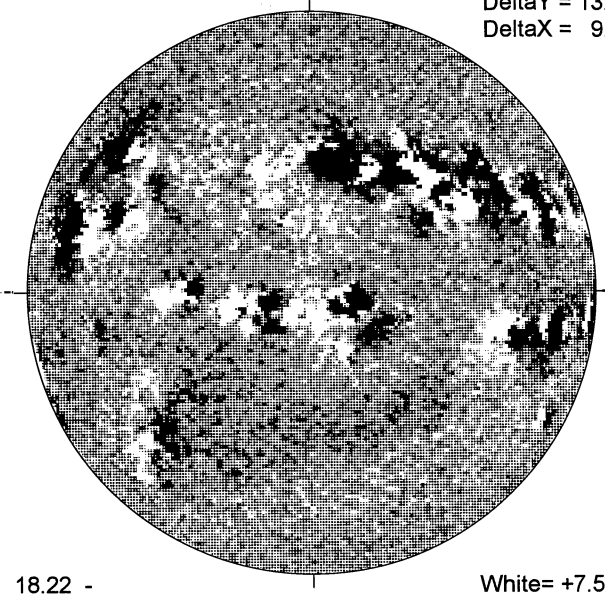

18.22 -
19.17 UT

White= +7.5G
Black = -7.5G

-----

MEUDON H-ALPHA

E-

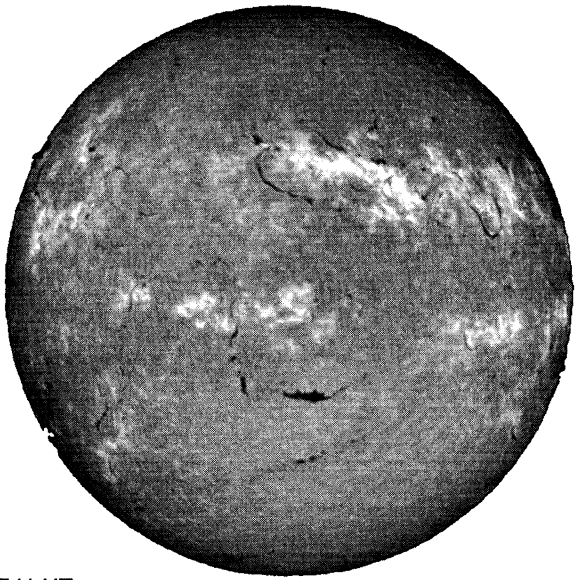

0741 UT

S

RAMEY SUNSPOT

RAMEY SUNSPOTS
March 30, 2001
12:05 UT Fair
Bp = -6.6
Po = -26.0
Lo = 132.5

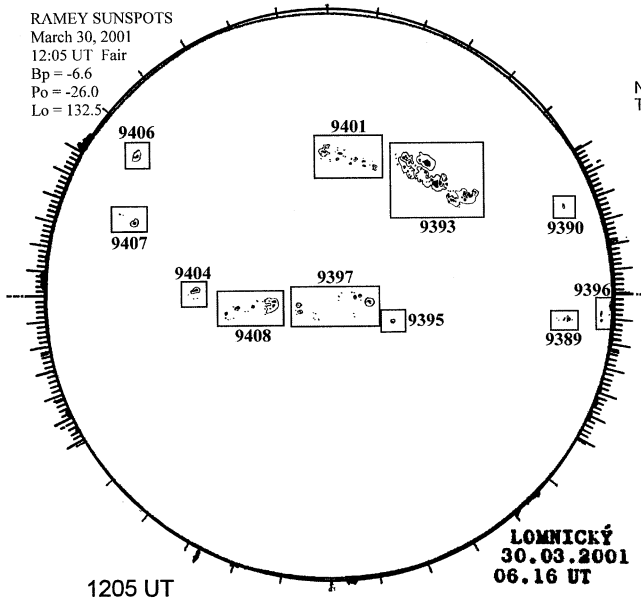


1205 UT
0616 UT LOMN Prom S

SACRAMENTO PEAK CORONA (1.15 Radii)----

NSO / SACRAMENTO PEAK CORONAL DATA
TICK MARKS EVERY 20 MILLIONTHS

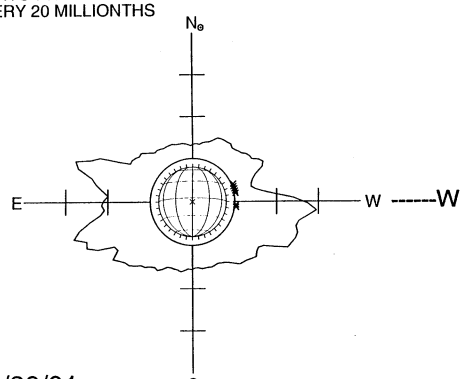


03/30/01
(DOY 89)

—— FE XIV 23:22 UT 1.15 R☉
xxxxx CA XV 22:18 UT 1.15 R☉

S

81
Mar 01