# MARCH 21, 2001 ( P= -25.28, Bo = -7.01, Lo = 256.80)

## KITT PEAK MAGNETOGRAM

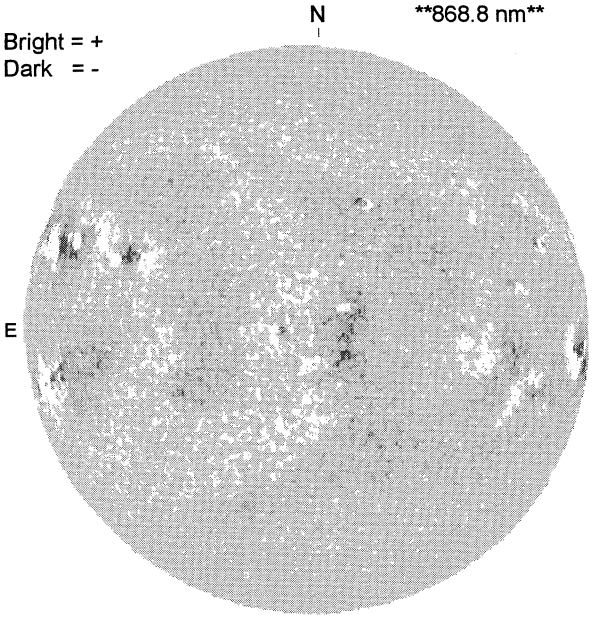


1532 UT

## STANFORD MAGNETOGRAM

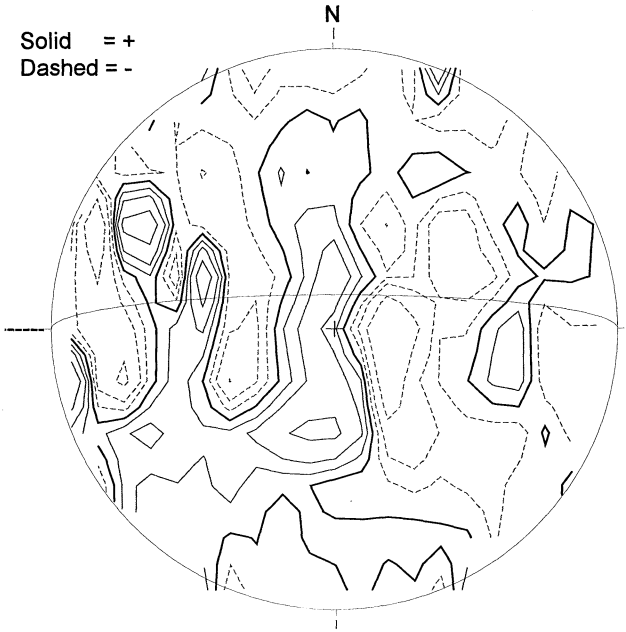


2050 UT

## MT. WILSON MAGNETOGRAM

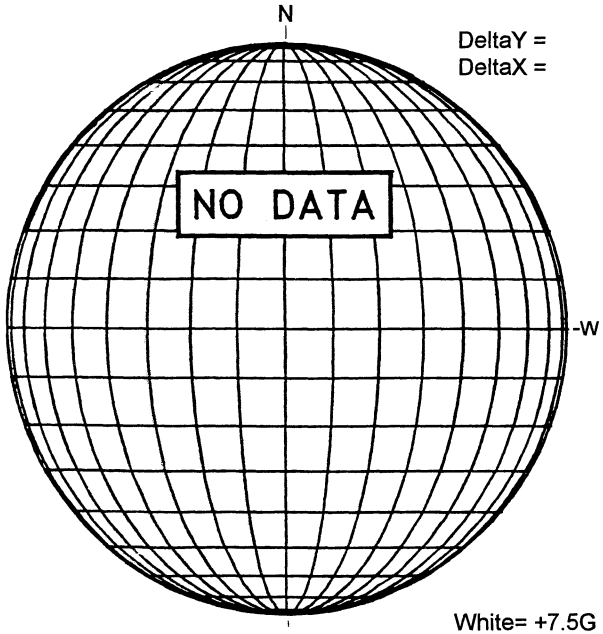


## MEUDON H-ALPHA

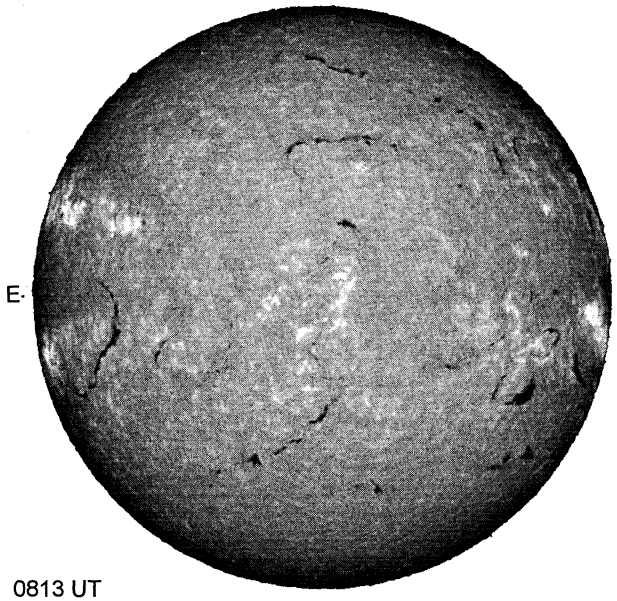


0813 UT

## RAMEY SUNSPOT

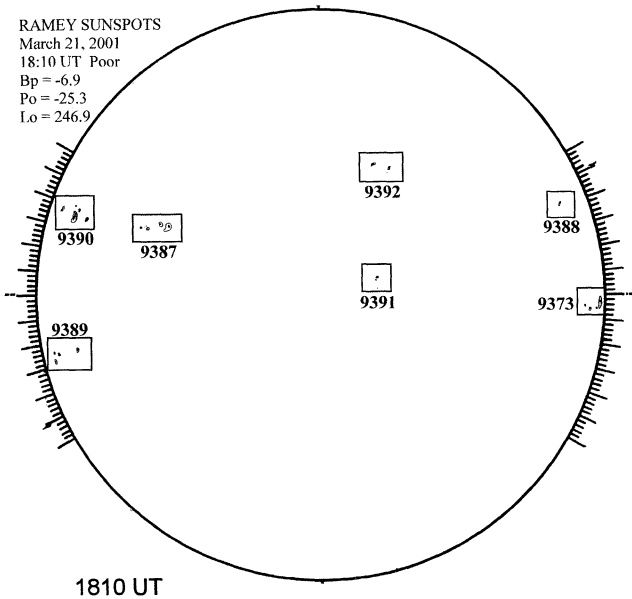


1810 UT
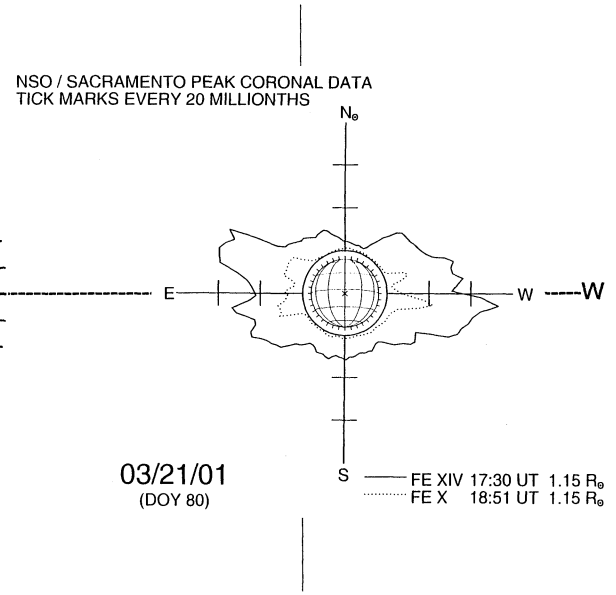
## SACRAMENTO PEAK CORONA (1.15 Radii)