MARCH 13, 2001 (P= -24.11, Bo = -7.20, Lo = 2.25)

KITT PEAK MAGNETOGRAM

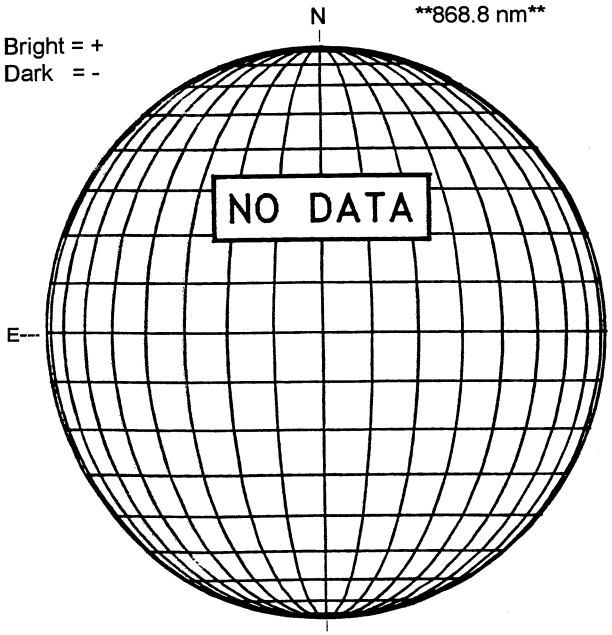

STANFORD MAGNETOGRAM

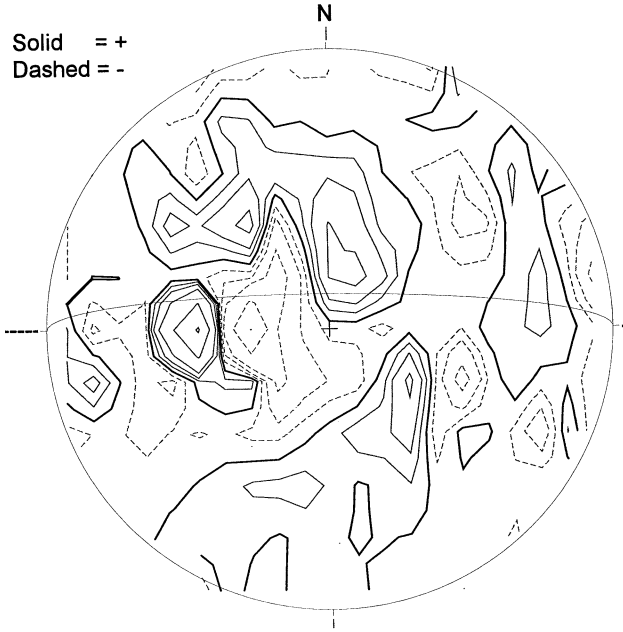

2117 UT

MT. WILSON MAGNETOGRAM

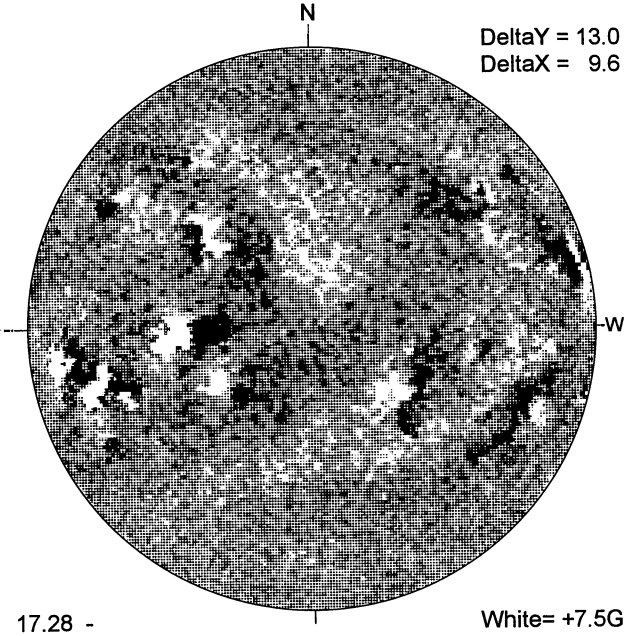

17.28 -
18.24 UT

White= +7.5G
Black = -7.5G

MEUDON H-ALPHA

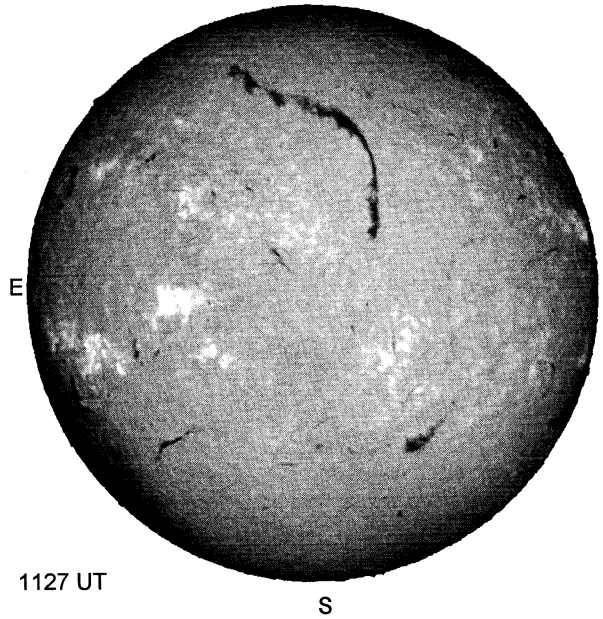

1127 UT

RAMEY SUNSPOT

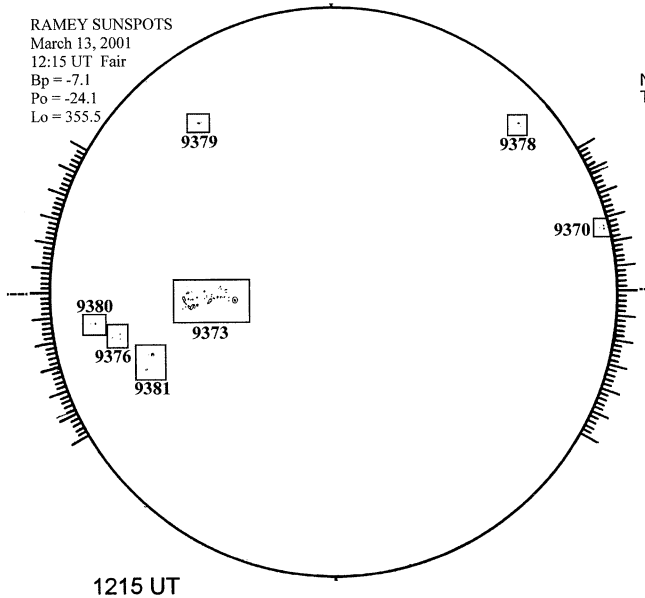

1215 UT

SACRAMENTO PEAK CORONA (1.15 Radii)----

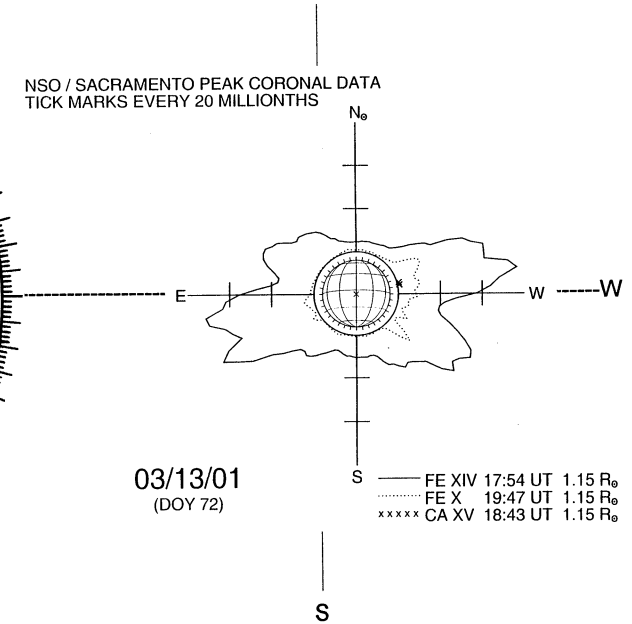

03/13/01
(DOY 72)