MARCH 12, 2001 (P= -23.93, Bo = -7.21, Lo = 15.43)

KITT PEAK MAGNETOGRAM

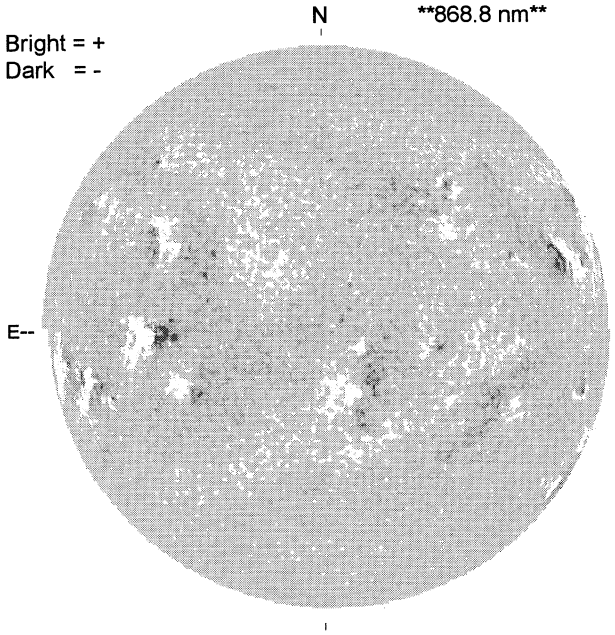

1544 UT

STANFORD MAGNETOGRAM

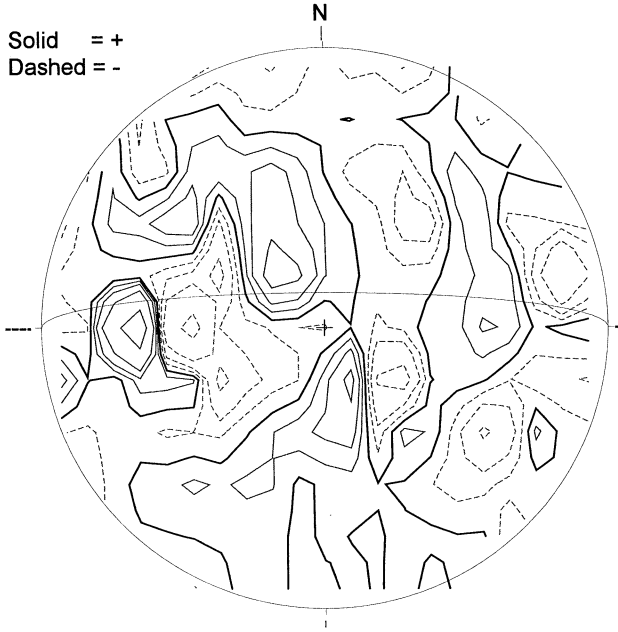

2121 UT

MT. WILSON MAGNETOGRAM

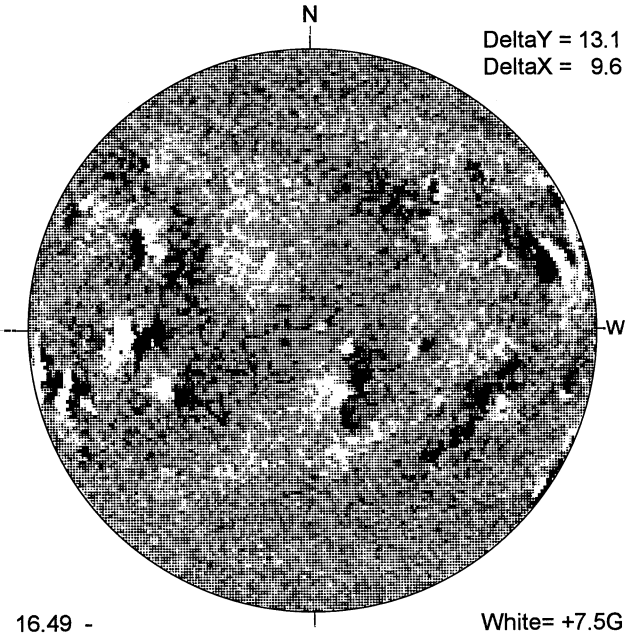

16.49 -
17.45 UT

White= +7.5G
Black = -7.5G

MEUDON H-ALPHA

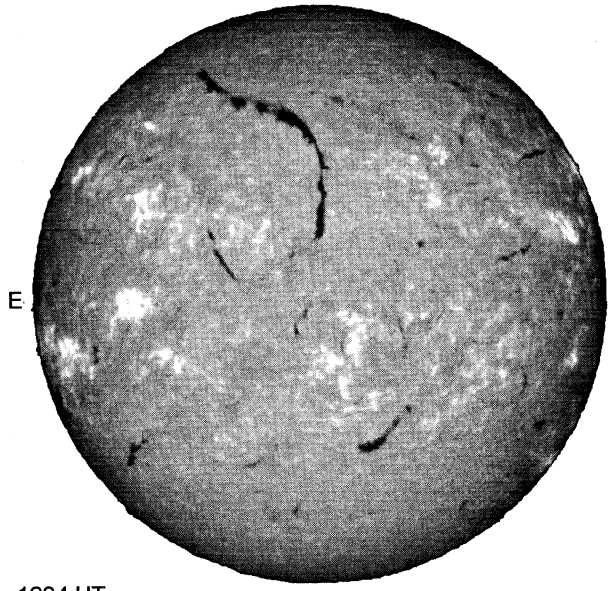

1234 UT

S

RAMEY SUNSPOTS

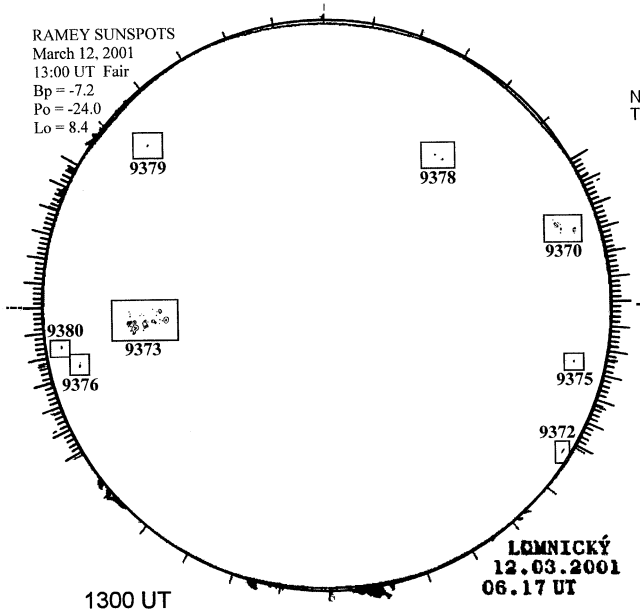

1300 UT
0617 UT LOMN Prom S

SACRAMENTO PEAK CORONA (1.15 Radii)----

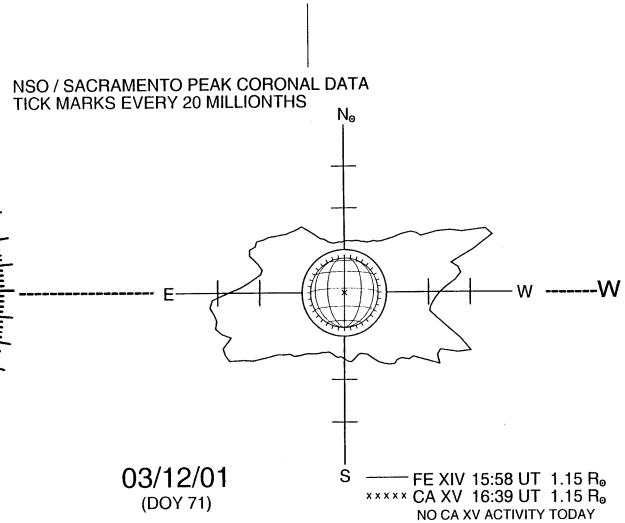

03/12/01
(DOY 71)

S

63
Mar 01