FEBRUARY 22, 2001 (P= -19.64, Bo = -7.08, Lo = 252.56)

KITT PEAK MAGNETOGRAM

Bright = +
Dark = -

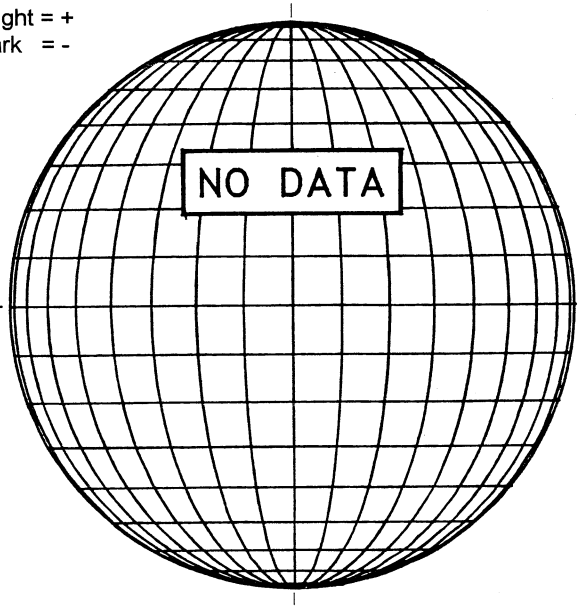

STANFORD MAGNETOGRAM

Solid = +
Dashed = -

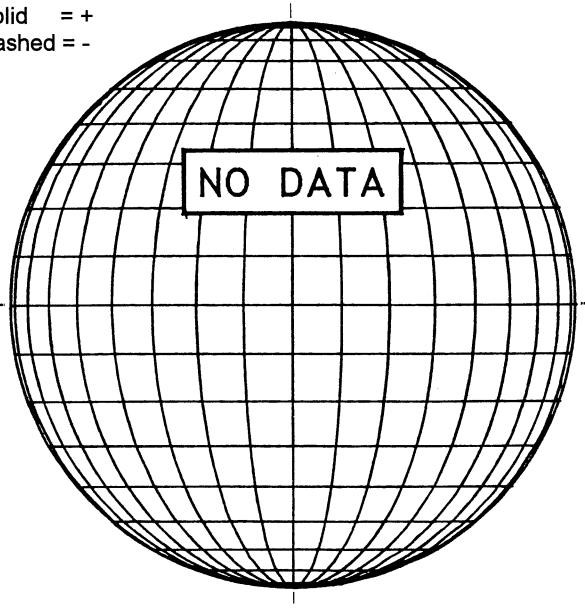

MT. WILSON MAGNETOGRAM

DeltaY = 20.1
DeltaX = 13.0

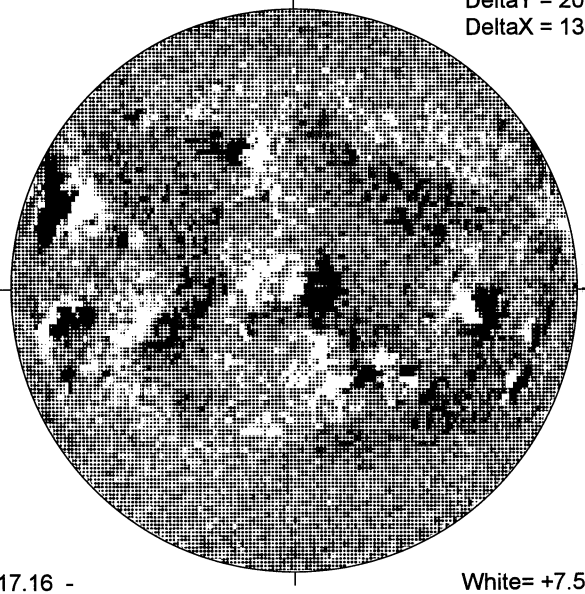

17.16 -
17.58 UT

White= +7.5G
Black = -7.5G

MEUDON H-ALPHA

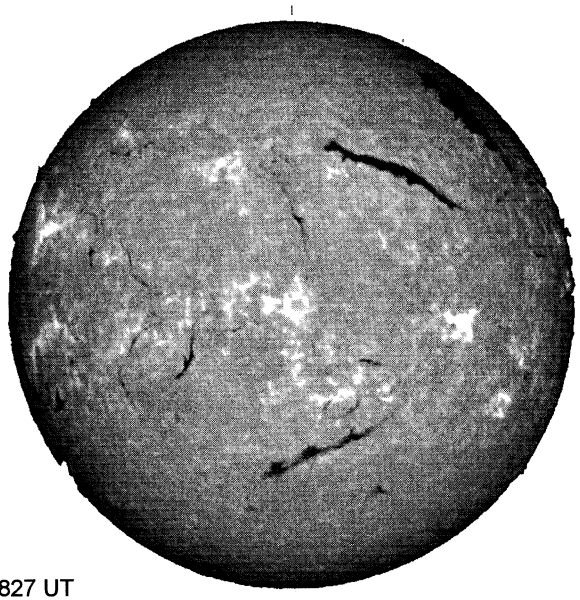

0827 UT

RAMEY SUNSPOT

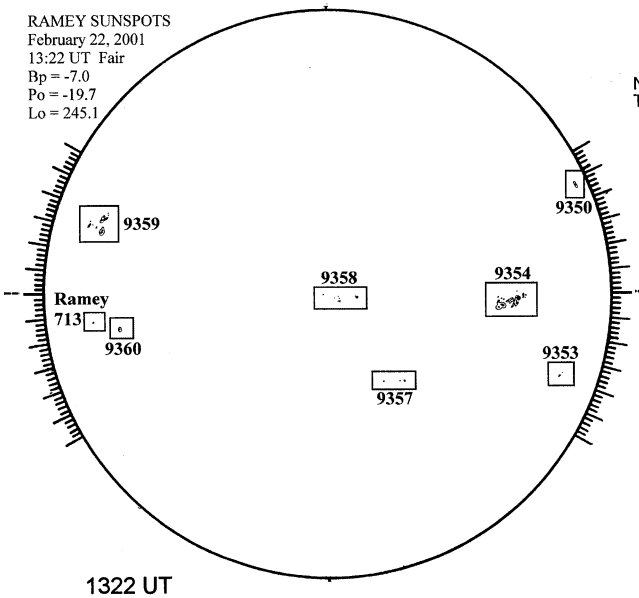

1322 UT

SACRAMENTO PEAK CORONA (1.15 Radii)----

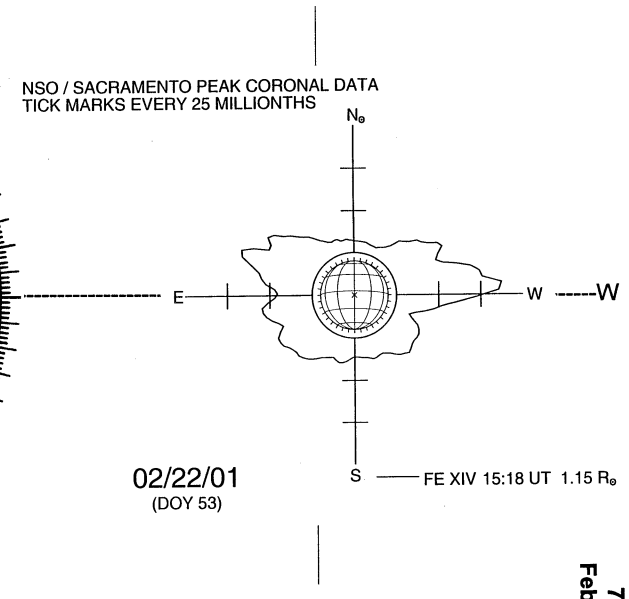

02/22/01
(DOY 53)

77
Feb 01