**FEBRUARY 14, 2001 ( P= -17.09, Bo = -6.79, Lo = 357.91)**

KITT PEAK MAGNETOGRAM

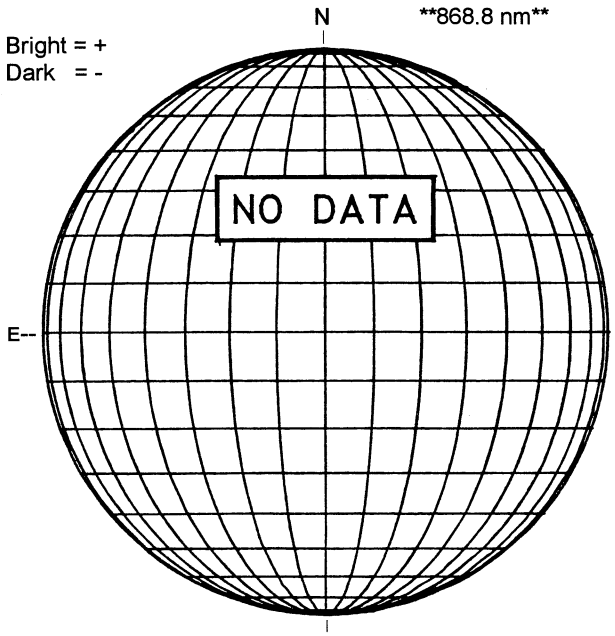


STANFORD MAGNETOGRAM

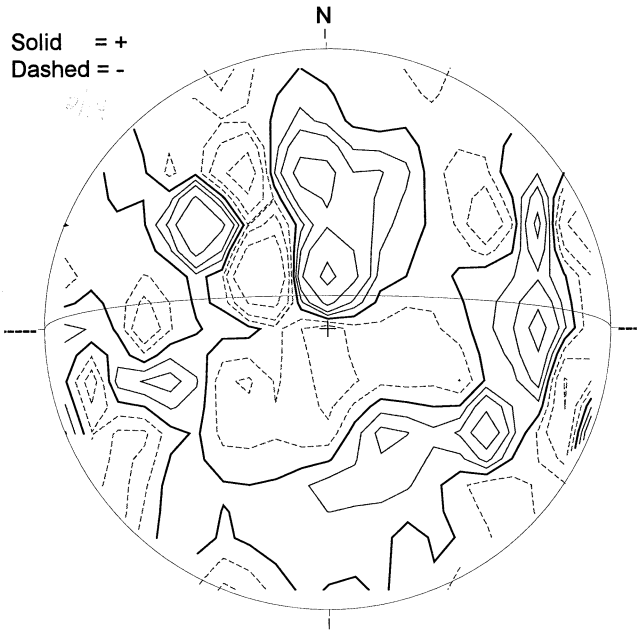


1853 UT

MT. WILSON MAGNETOGRAM

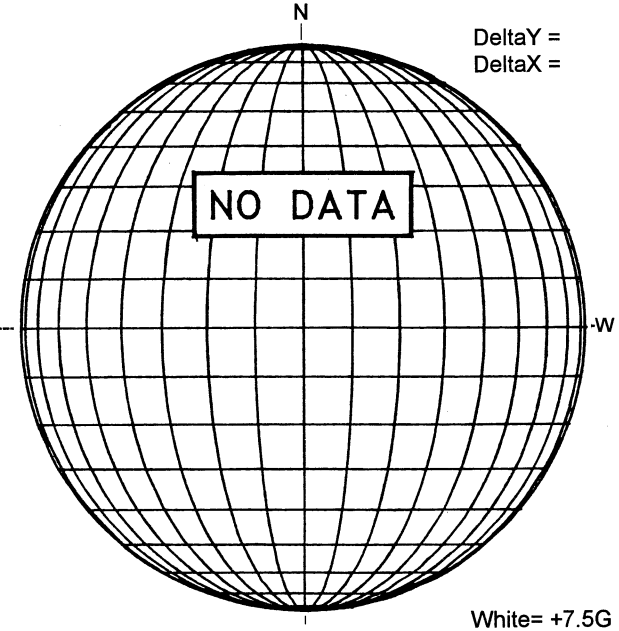


MEUDON H-ALPHA

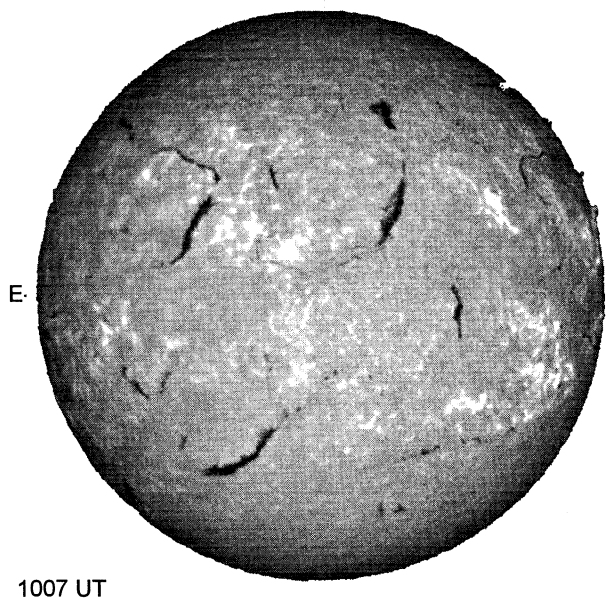


1007 UT

S

RAMEY SUNSPOT

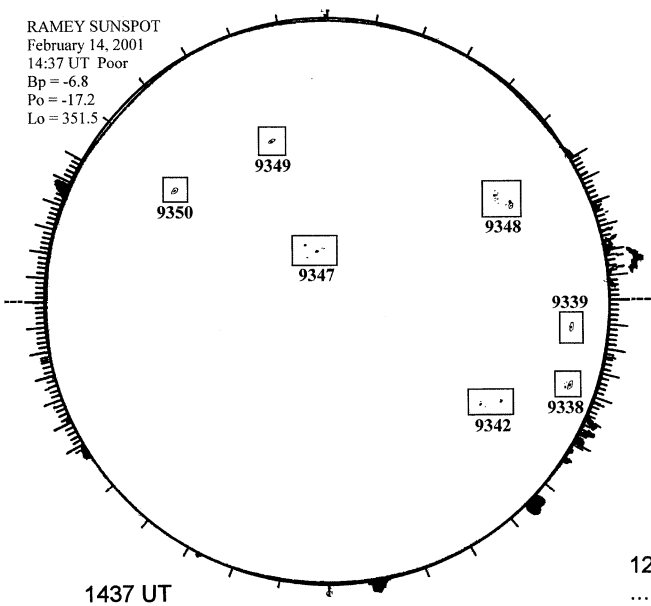


1437 UT
1001 UT LOMN Prom S

LOMNICKY PEAK CORONA (1.04 Radii)----

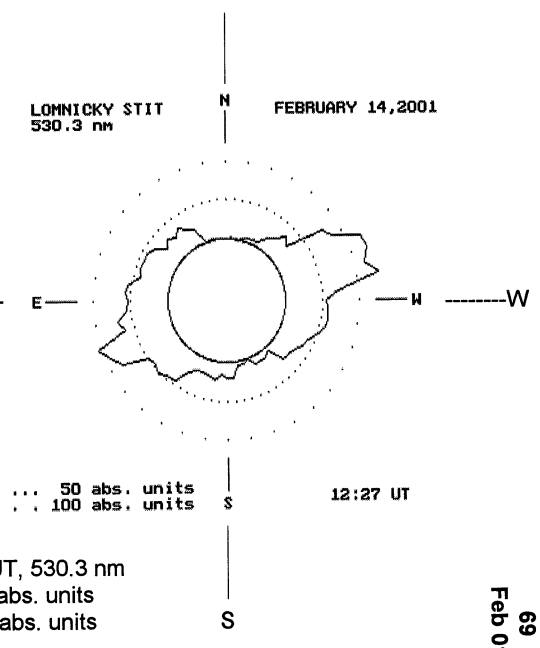


1227 UT, 530.3 nm
.... 50 abs. units
. . 100 abs. units

S

69
Feb 01