FEBRUARY 1, 2001 (P= -12.21, Bo = -6.03, Lo = 169.08)

KITT PEAK MAGNETOGRAM

Bright = +
Dark = -

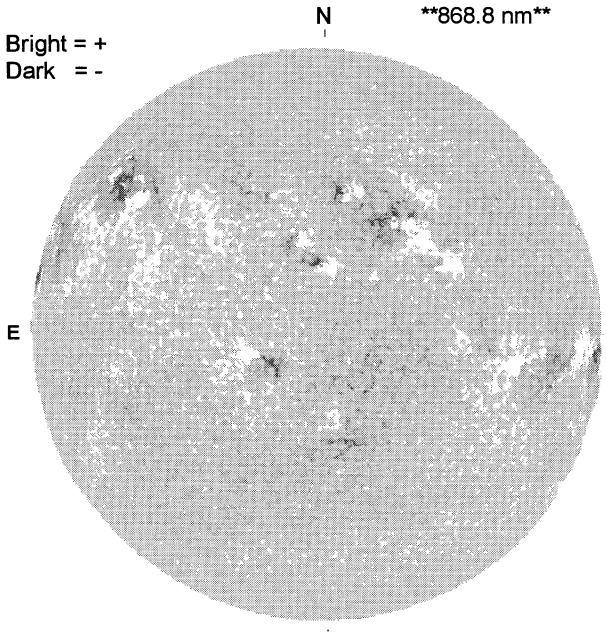

868.8 nm

1653 UT

STANFORD MAGNETOGRAM

Solid = +
Dashed = -

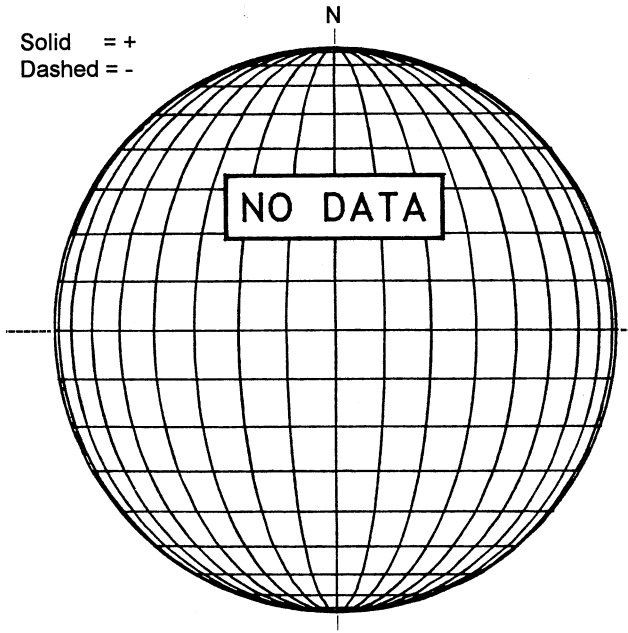

MT. WILSON MAGNETOGRAM

DeltaY = 13.0
DeltaX = 9.6

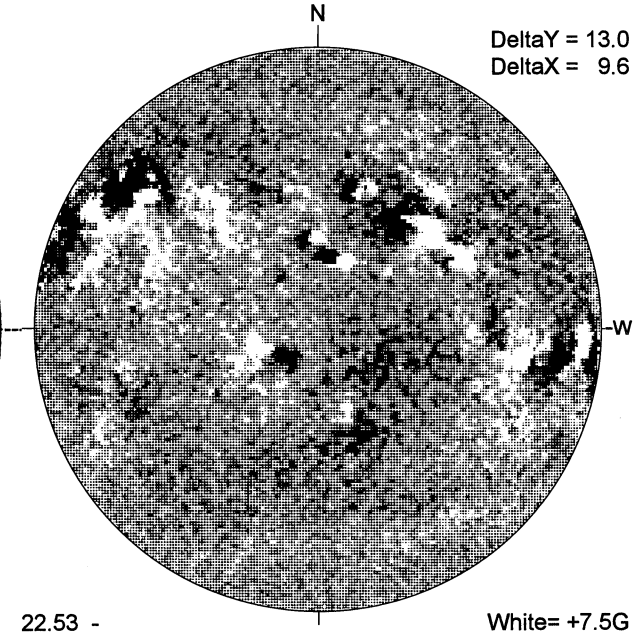

22.53 -
23.51 UT

White= +7.5G
Black = -7.5G

MEUDON H-ALPHA

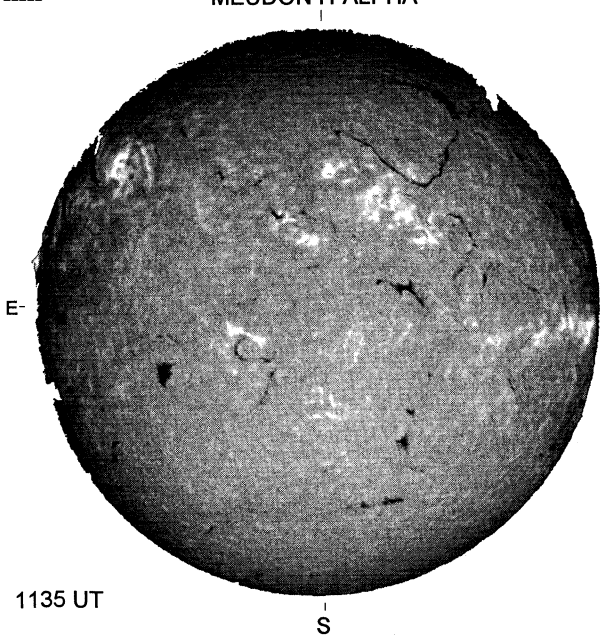

1135 UT

RAMEY SUNSPOT

RAMEY SUNSPOTS
February 1, 2001
12:09 UT Fair
Bp = -6.0
Po = -12.4
Lo = 162.3

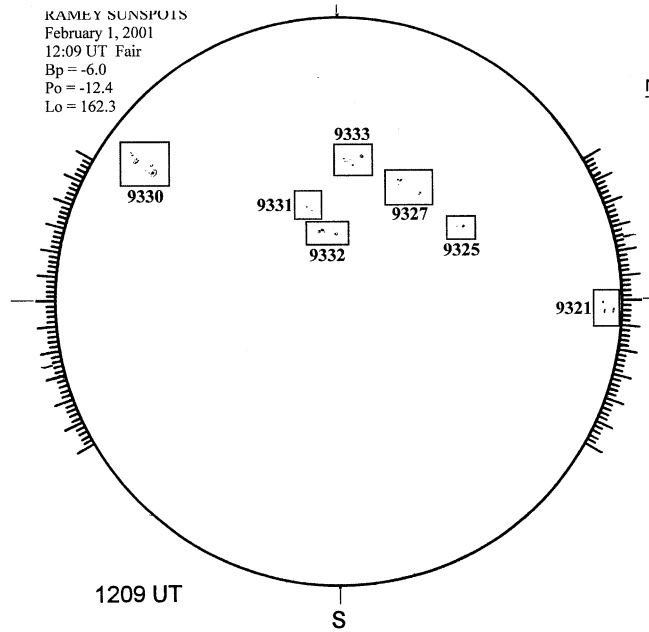

1209 UT

SACRAMENTO PEAK CORONA (1.15 Radii)

NSO / SACRAMENTO PEAK CORONAL DATA
TICK MARKS EVERY 25 MILLIONTHS

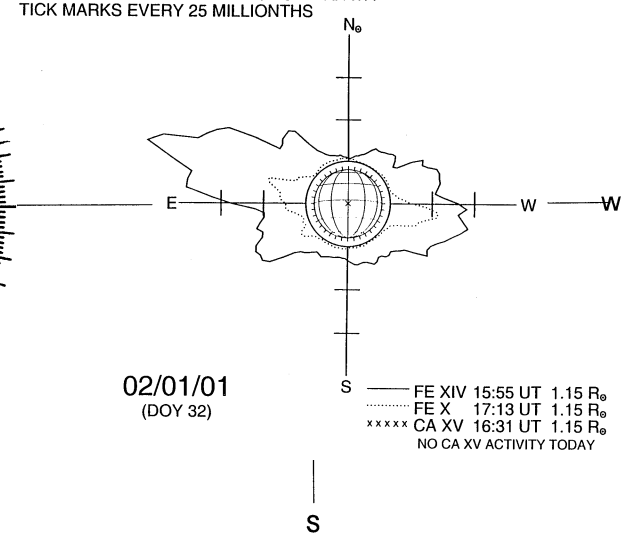

02/01/01
(DOY 32)

FE XIV 15:55 UT 1.15 R⊙
FE X 17:13 UT 1.15 R⊙
xxxxx CA XV 16:31 UT 1.15 R⊙
NO CA XV ACTIVITY TODAY