JANUARY 31, 2001 (P= -11.80, Bo = -5.96, Lo = 182.25)

KITT PEAK MAGNETOGRAM

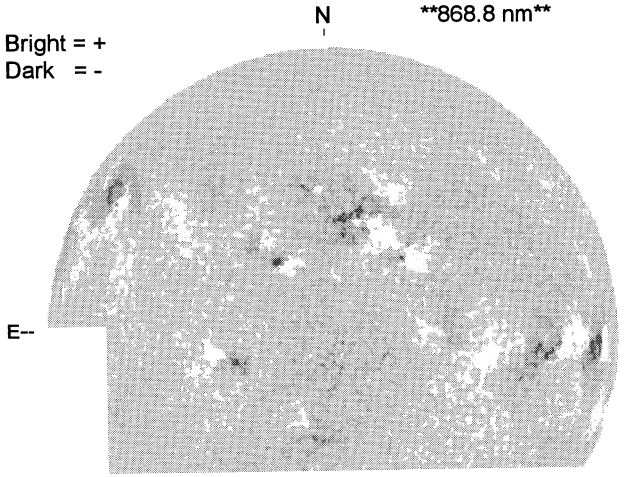

2120 UT

STANFORD MAGNETOGRAM

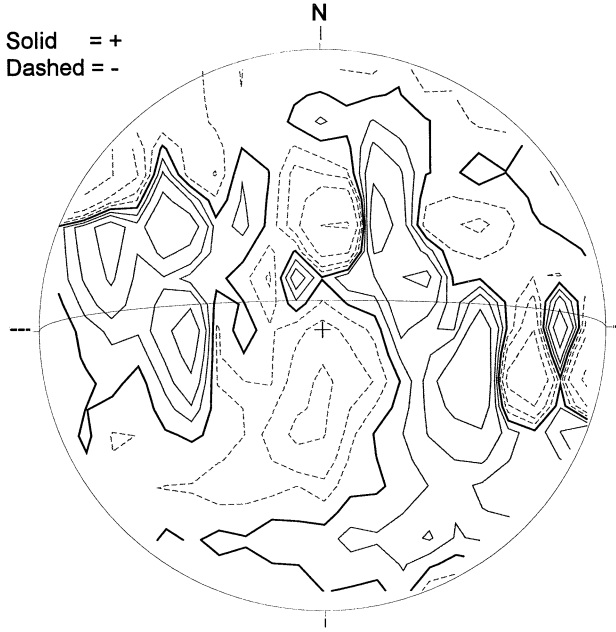

2107 UT

MT. WILSON MAGNETOGRAM

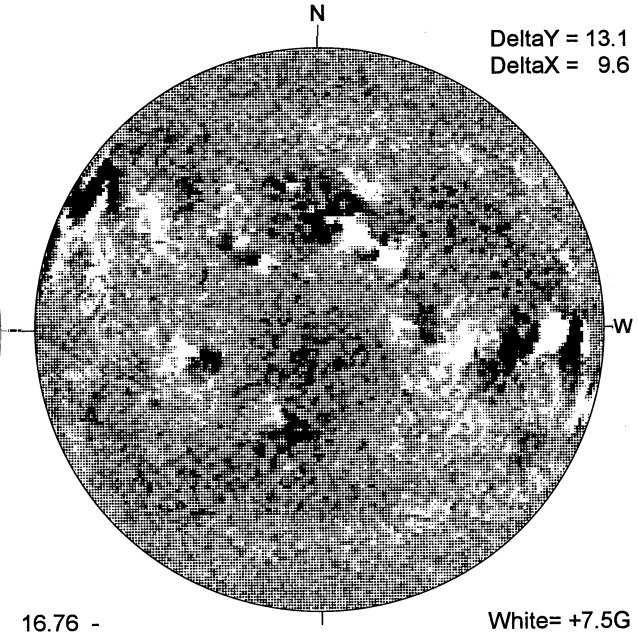

16.76 -
17.74 UT

MEUDON H-ALPHA

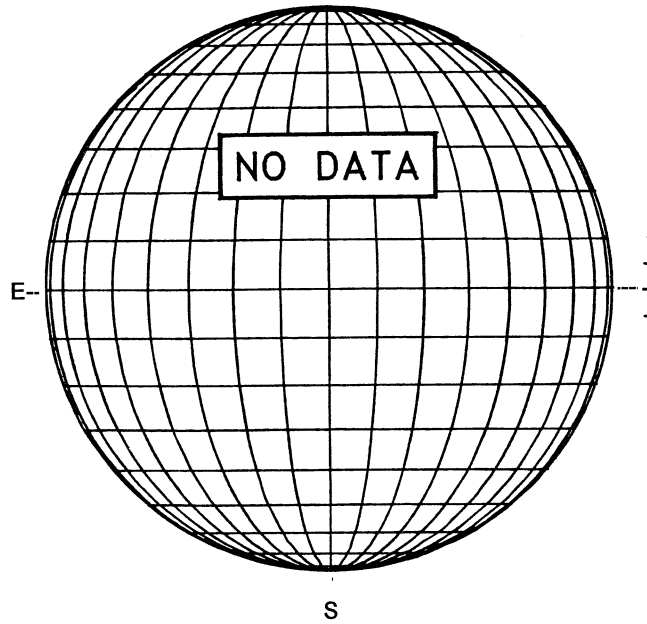

RAMEY SUNSPOT

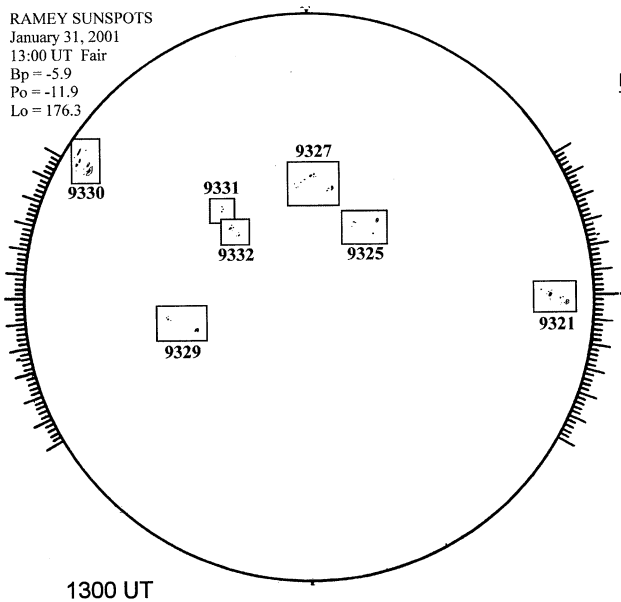

1300 UT

SACRAMENTO PEAK CORONA (1.15 Radii)----

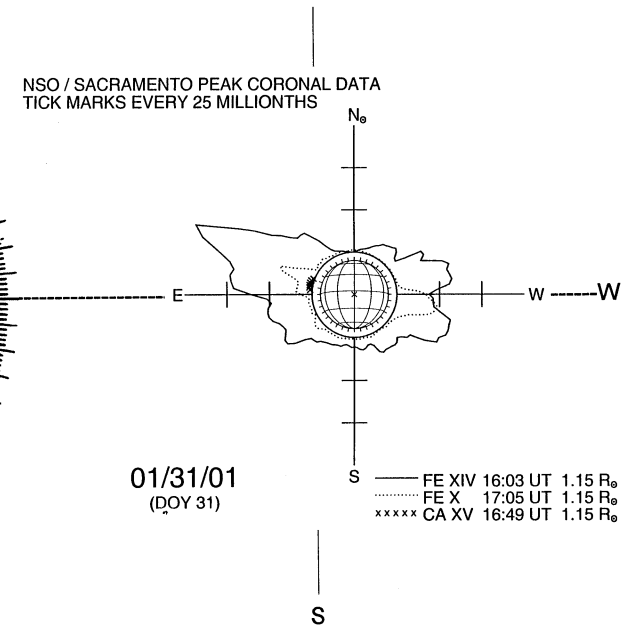

01/31/01
(DOY 31)