JANUARY 19, 2001 (P= -6.56, Bo = -4.96, Lo = 340.24)

KITT PEAK MAGNETOGRAM

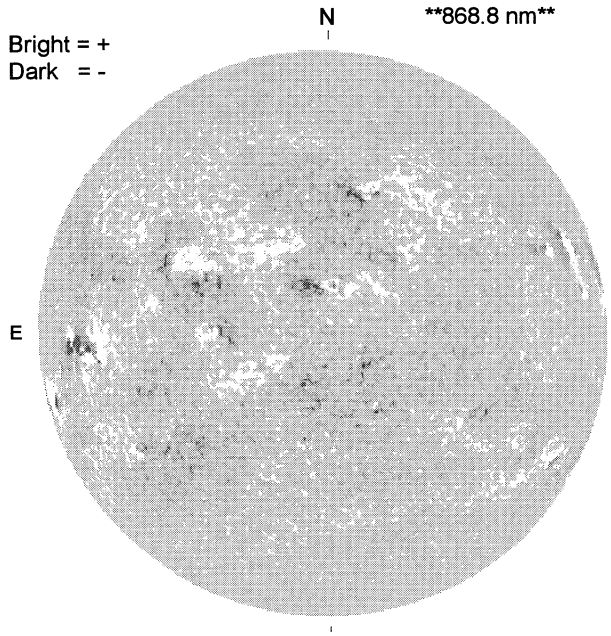

1642 UT

STANFORD MAGNETOGRAM

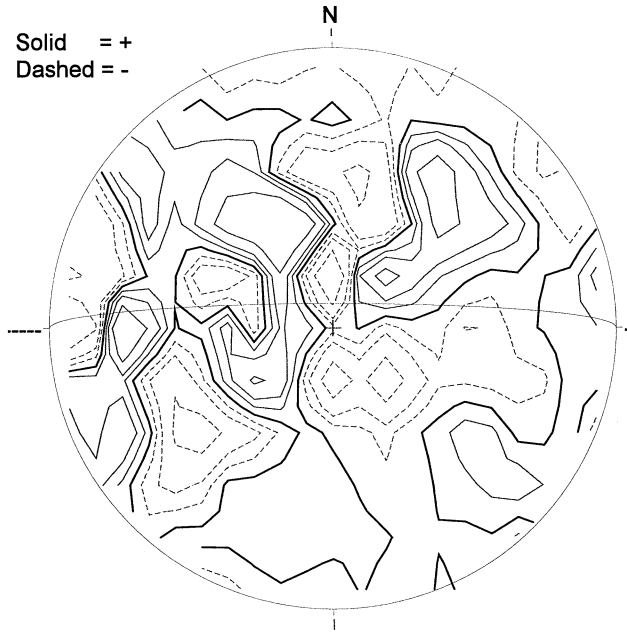

2138 UT

MT. WILSON MAGNETOGRAM

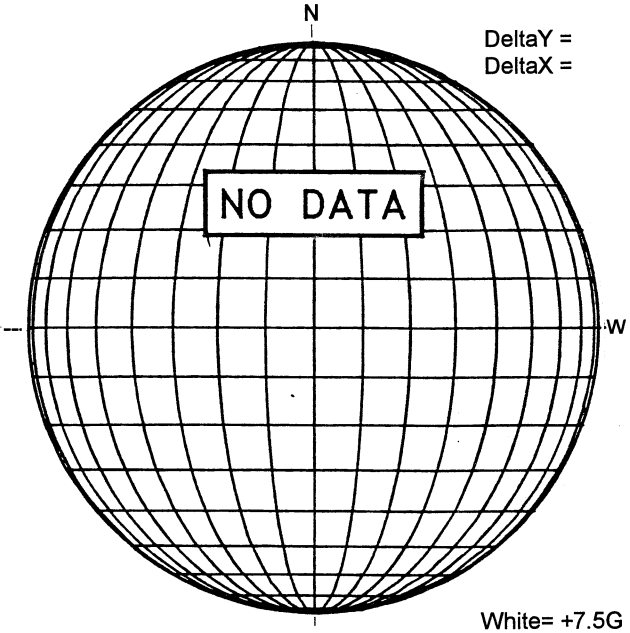

MEUDON H-ALPHA

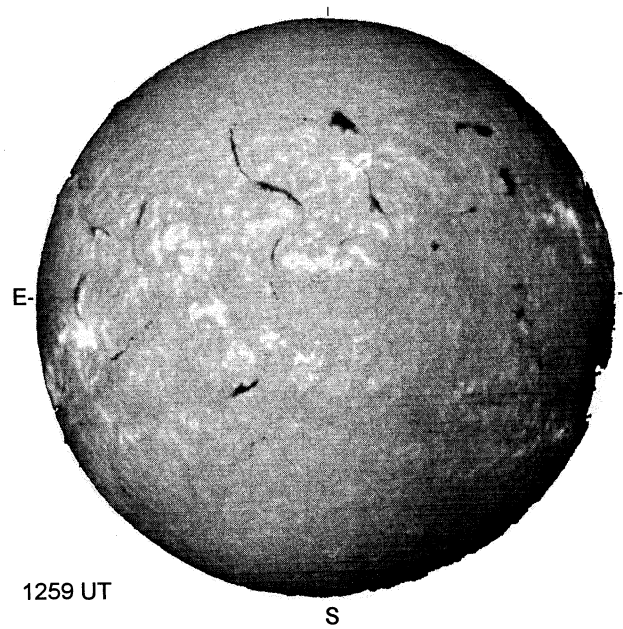

1259 UT

RAMEY SUNSPOT

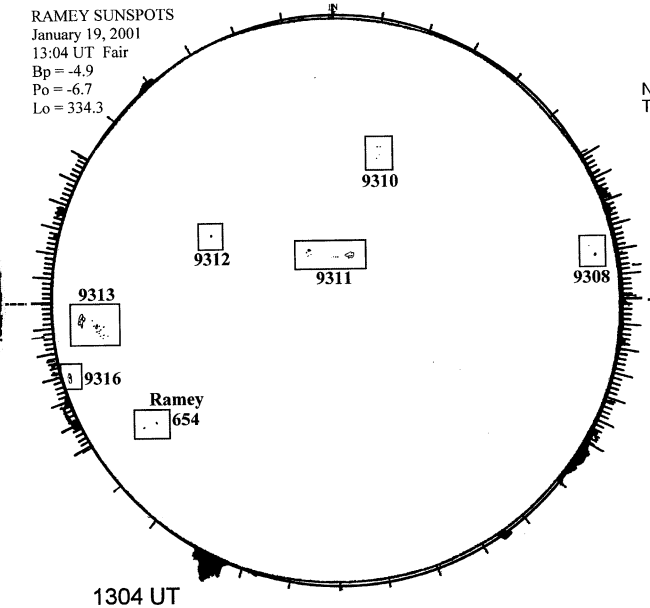

1304 UT
1011 UT LOMN Prom S
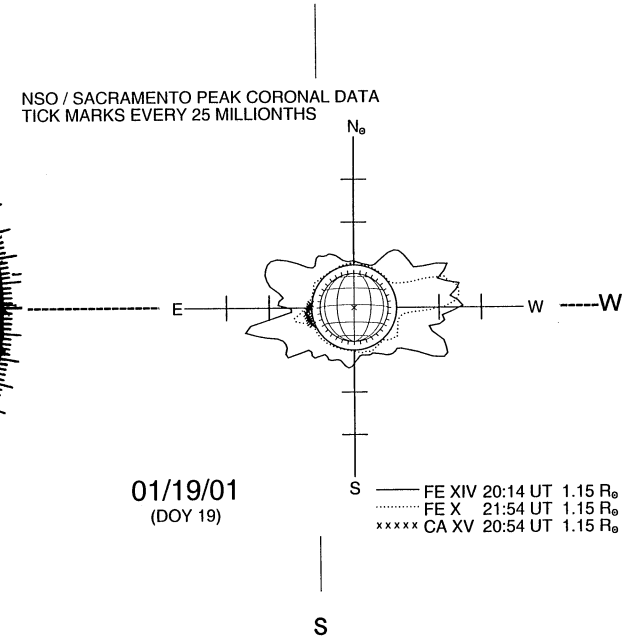
SACRAMENTO PEAK CORONA (1.15 Radii)