JANUARY 11, 2001 (P= -2.82, Bo = -4.16, Lo = 85.58)

KITT PEAK MAGNETOGRAM

868.8 nm

Bright = +
Dark = -

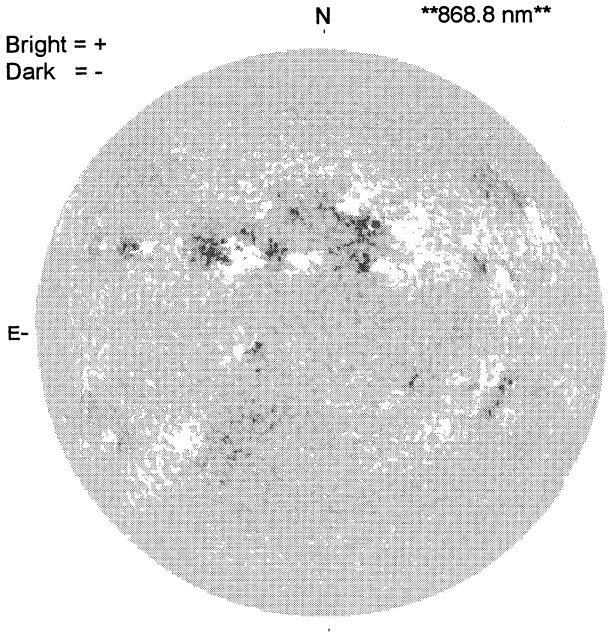

1618 UT

STANFORD MAGNETOGRAM

Solid = +
Dashed = -

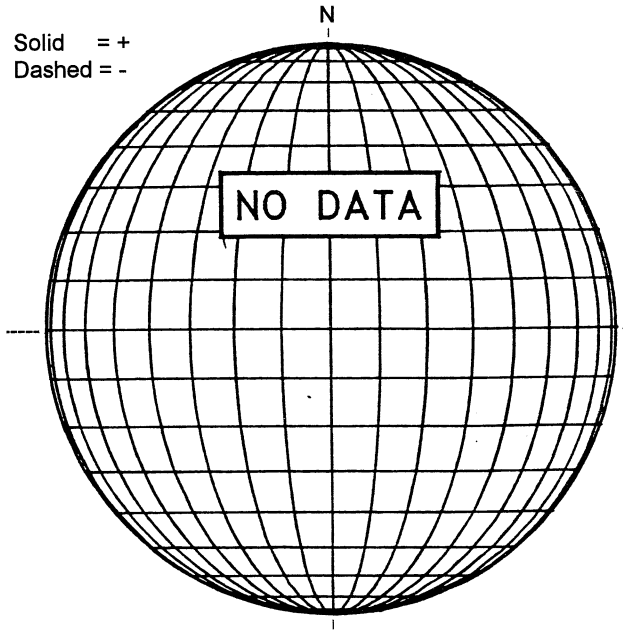

MT. WILSON MAGNETOGRAM

DeltaY =
DeltaX =

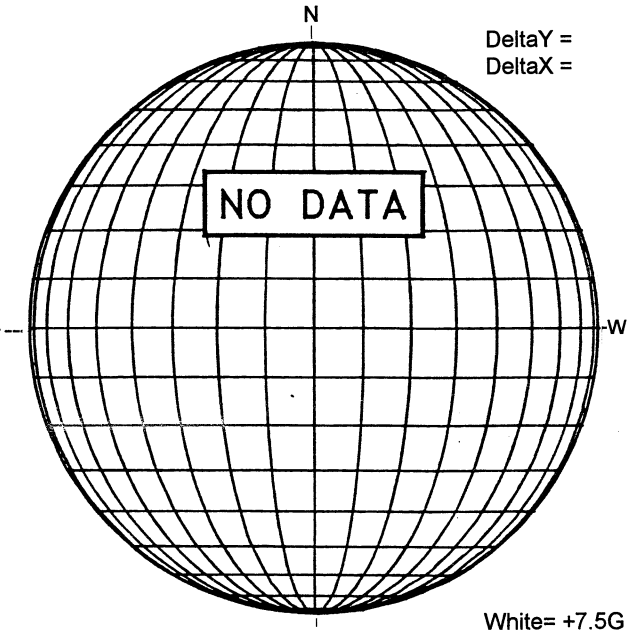

White= +7.5G
Black = -7.5G

MEUDON H-ALPHA

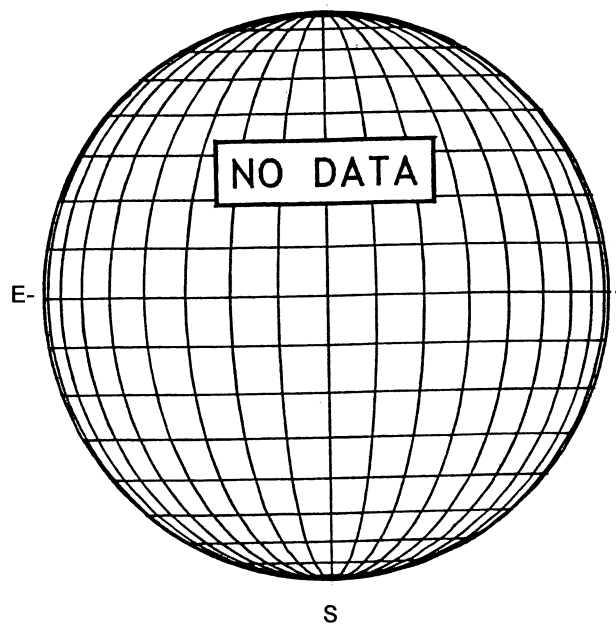

HOLLOMAN SUNSPOTS

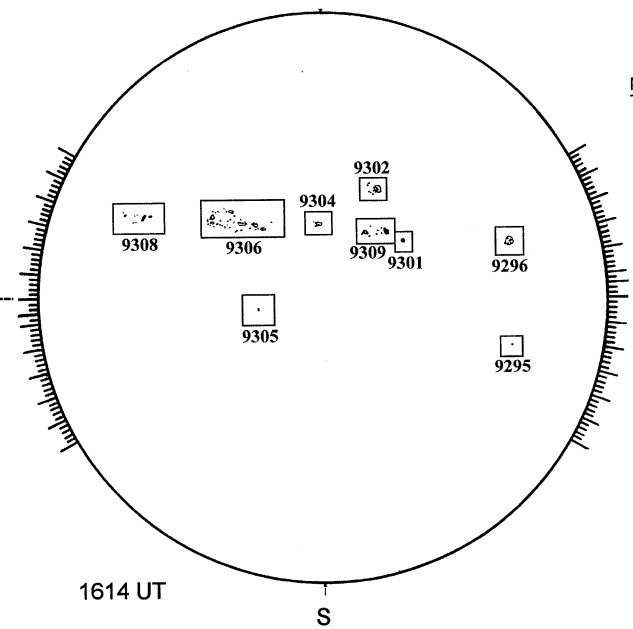

1614 UT

SACRAMENTO PEAK CORONA (1.15 Radii)

NSO / SACRAMENTO PEAK CORONAL DATA
TICK MARKS EVERY 25 MILLIONTHS

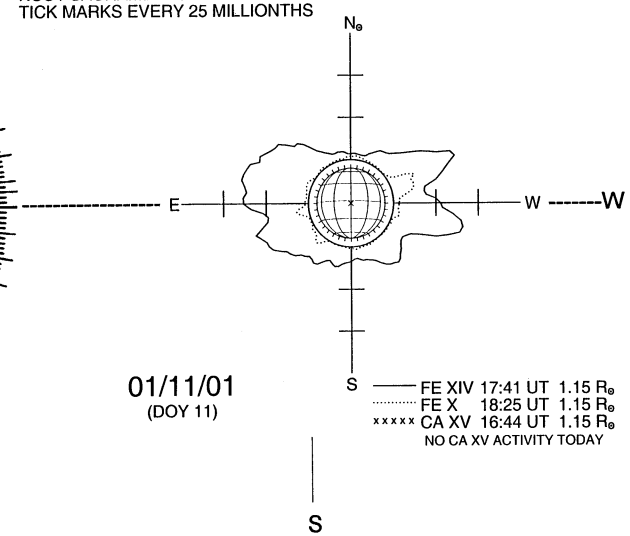

01/11/01
(DOY 11)

FE XIV 17:41 UT 1.15 R☉
FE X 18:25 UT 1.15 R☉
CA XV 16:44 UT 1.15 R☉
NO CA XV ACTIVITY TODAY