DECEMBER 29, 2000 (P= 3.46, Bo = -2.69, Lo = 256.79)

KITT PEAK MAGNETOGRAM

868.8 nm

Bright = +
Dark = -

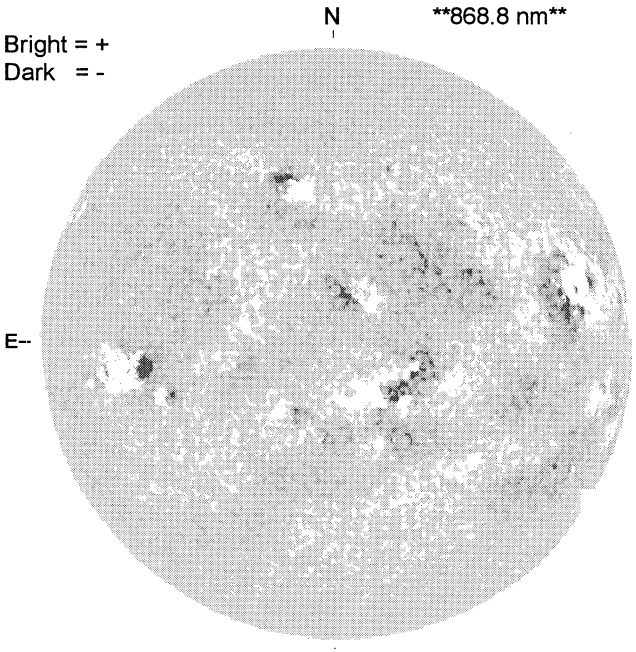

1730 UT

STANFORD MAGNETOGRAM

Solid = +
Dashed = -

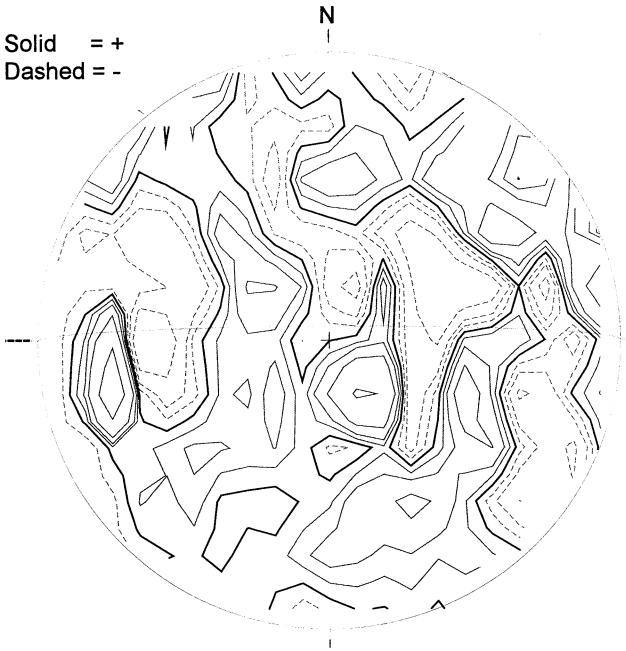

2303 UT

MT. WILSON MAGNETOGRAM

DeltaY = 13.1
DeltaX = 9.6

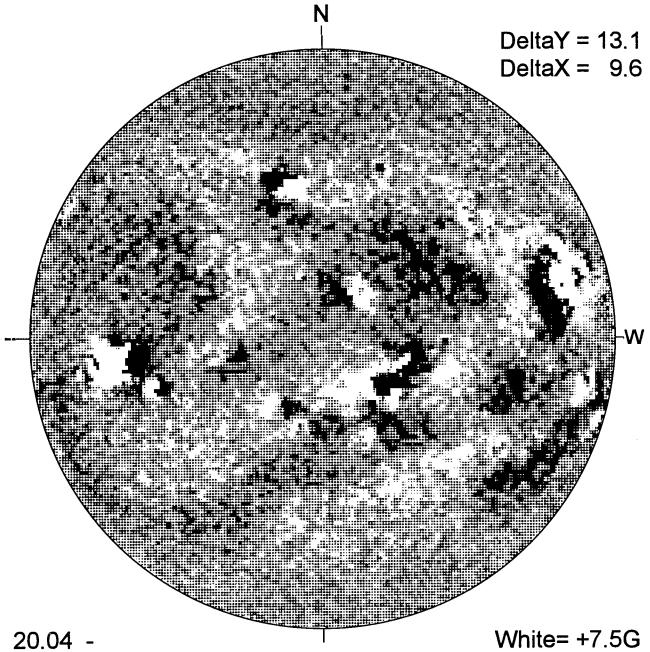

20.04 -
21.02 UT

White= +7.5G
Black = -7.5G

MEUDON H-ALPHA

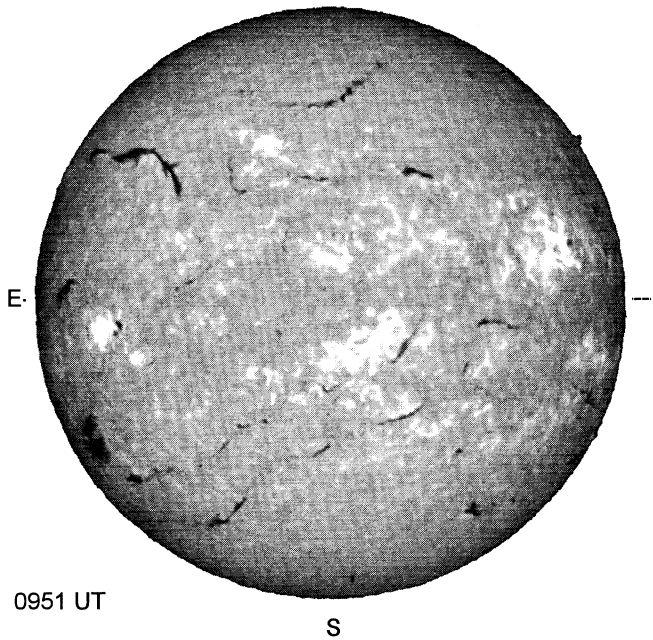

0951 UT

RAMEY SUNSPOT

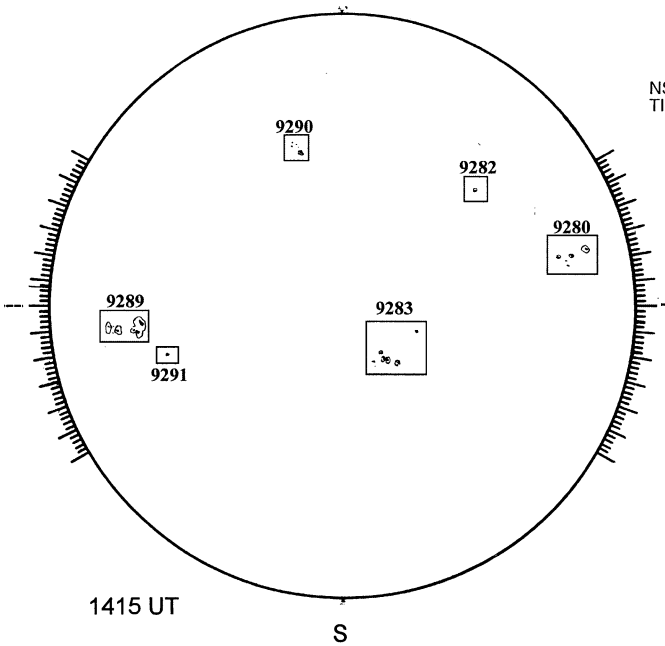

1415 UT

SACRAMENTO PEAK CORONA (1.15 Radii)

NSO / SACRAMENTO PEAK CORONAL DATA
TICK MARKS EVERY 25 MILLIONTHS

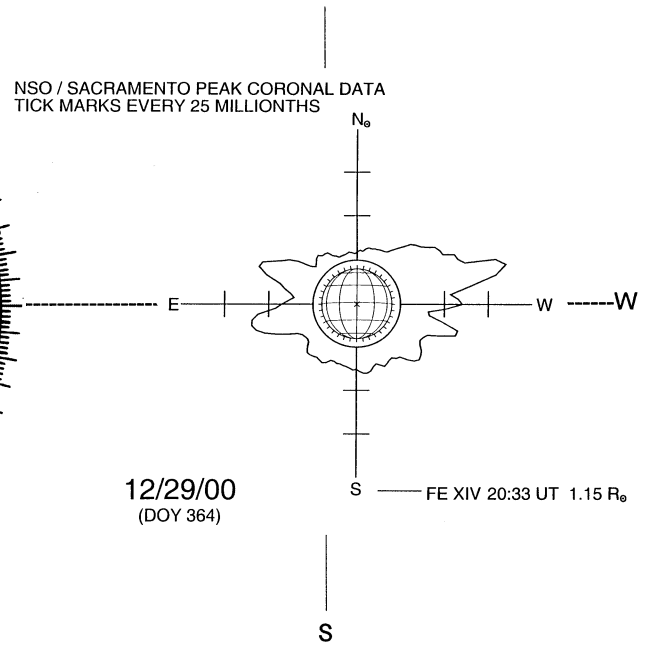

12/29/00
(DOY 364)

FE XIV 20:33 UT 1.15 R⊙