DECEMBER 15, 2000 (P= 10.08, Bo = -0.95, Lo = 81.21)

KITT PEAK MAGNETOGRAM

868.8 nm

Bright = +
Dark = -

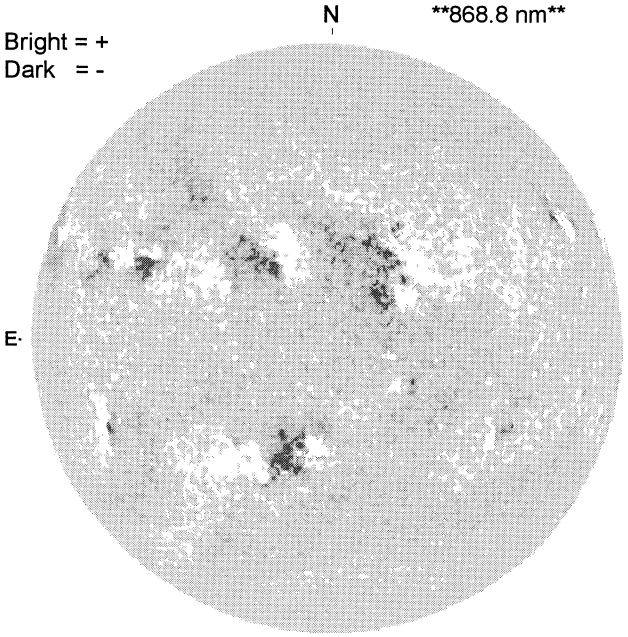

1721 UT

STANFORD MAGNETOGRAM

Solid = +
Dashed = -

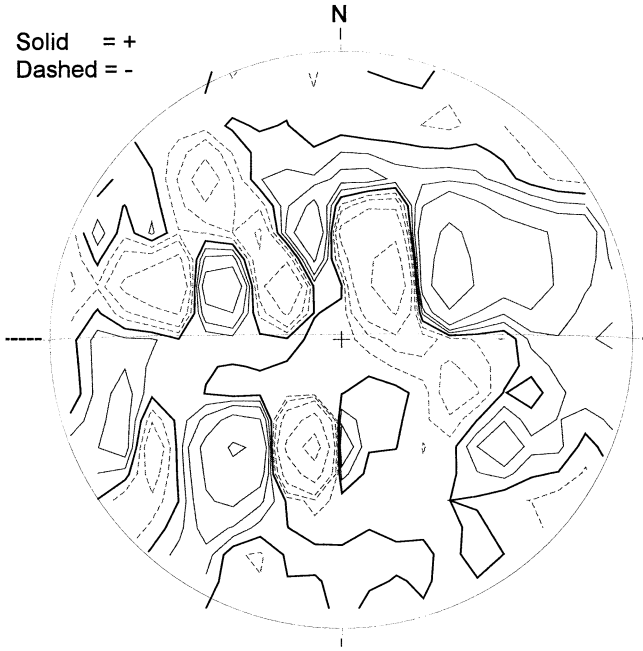

2035 UT

MT. WILSON MAGNETOGRAM

DeltaY = 13.1
DeltaX = 9.6

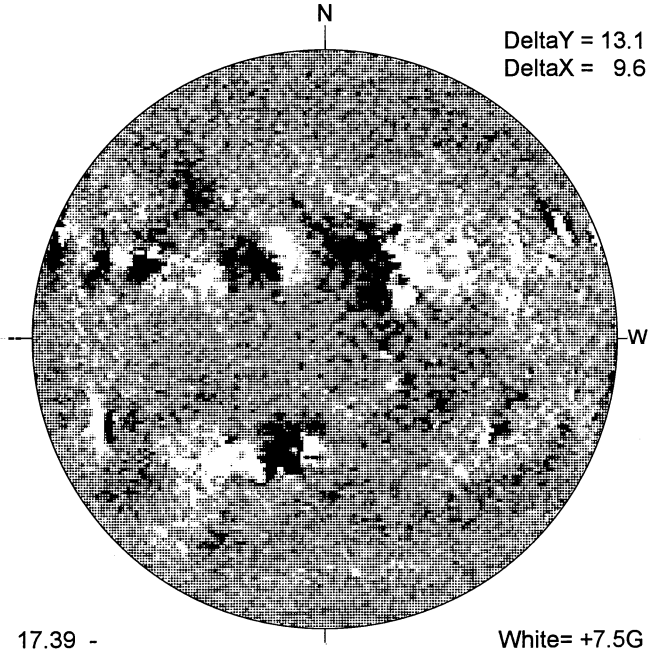

17.39 -
18.36 UT

White= +7.5G
Black = -7.5G

MEUDON H-ALPHA

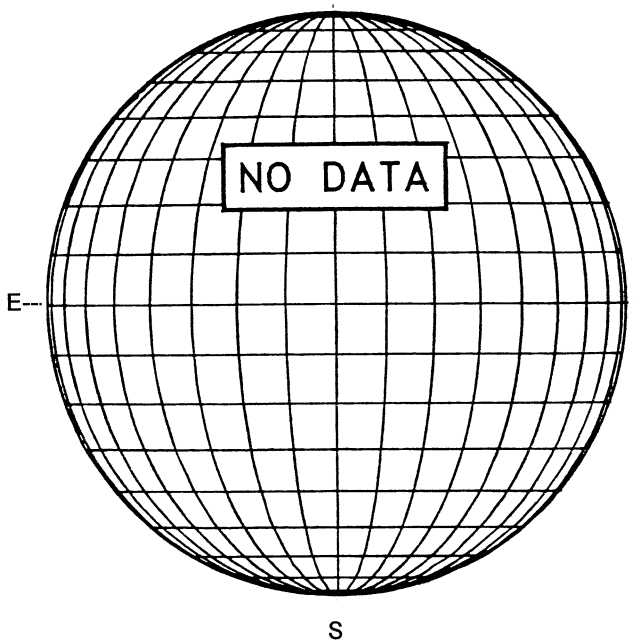

RAMEY SUNSPOT

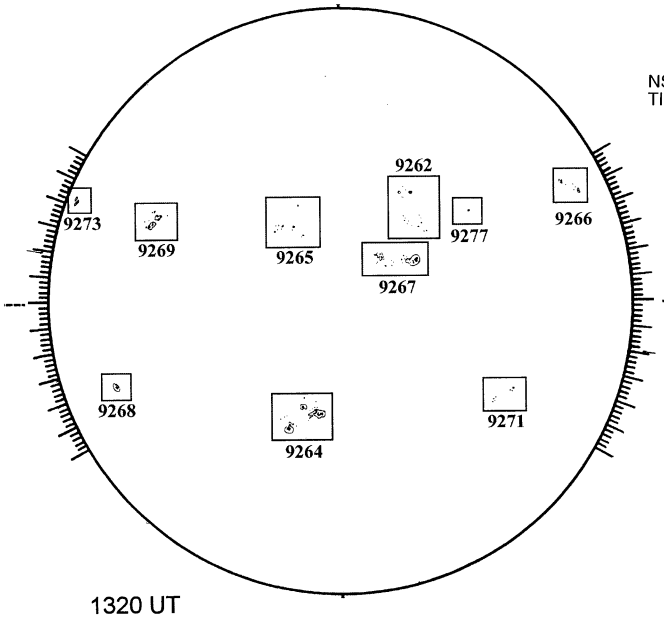

1320 UT

SACRAMENTO PEAK CORONA (1.15 Radii)

NSO / SACRAMENTO PEAK CORONAL DATA
TICK MARKS EVERY 25 MILLIONTHS

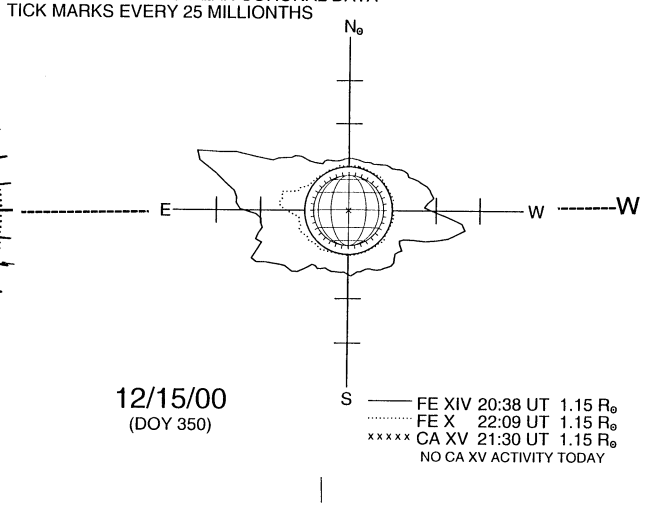

12/15/00
(DOY 350)

FE XIV 20:38 UT 1.15 R☉
FE X 22:09 UT 1.15 R☉
CA XV 21:30 UT 1.15 R☉
NO CA XV ACTIVITY TODAY