NOVEMBER 17, 2000 (P= 20.76, Bo = 2.57, Lo = 90.21)

KITT PEAK MAGNETOGRAM

868.8 nm

Bright = +
Dark = -

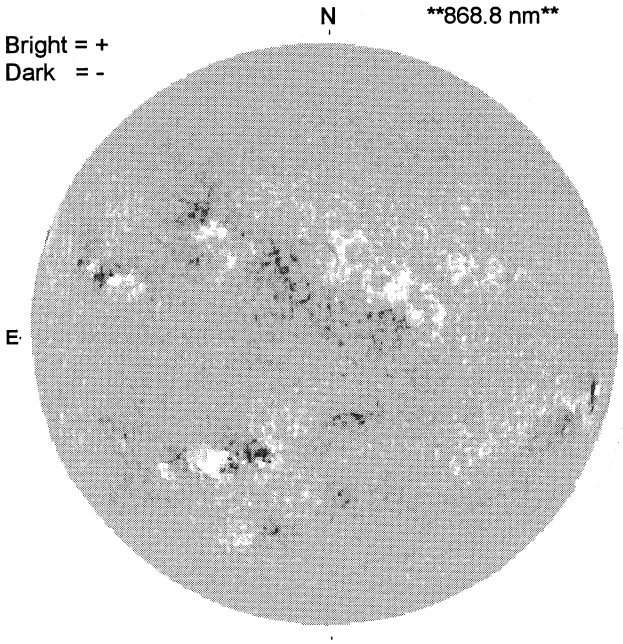

1605 UT

STANFORD MAGNETOGRAM

Solid = +
Dashed = -

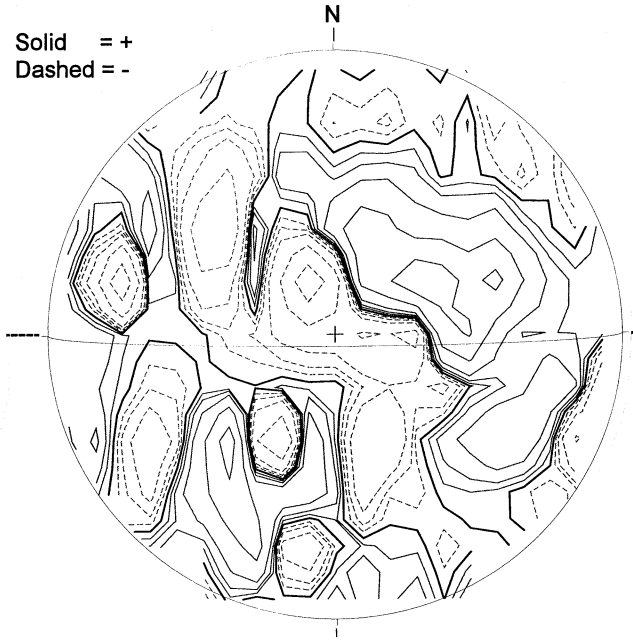

2206 UT

MT. WILSON MAGNETOGRAM

DeltaY = 13.0
DeltaX = 9.6

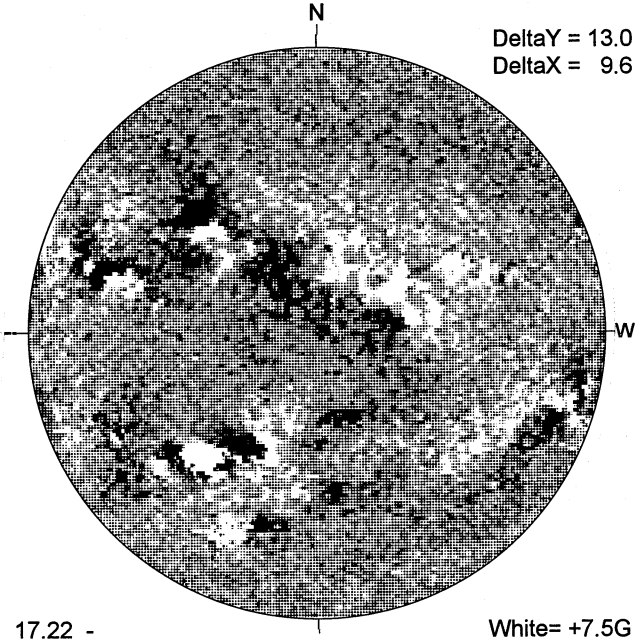

17.22 -
18.19 UT

White= +7.5G
Black = -7.5G

MEUDON H-ALPHA

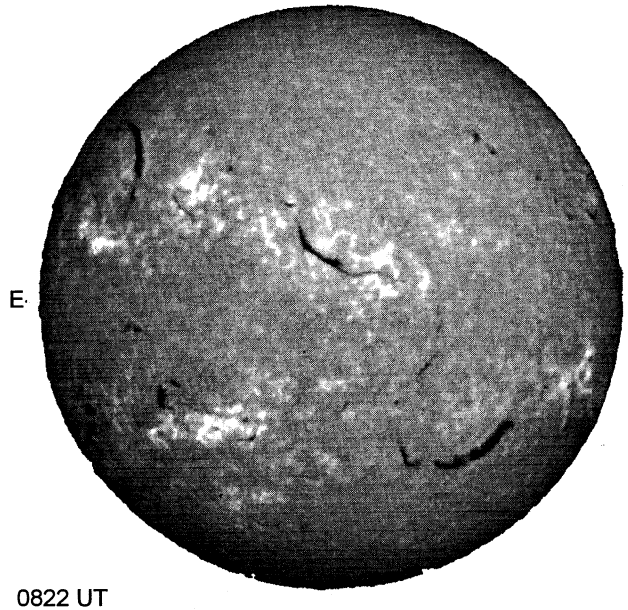

0822 UT

S

RAMEY SUNSPOT

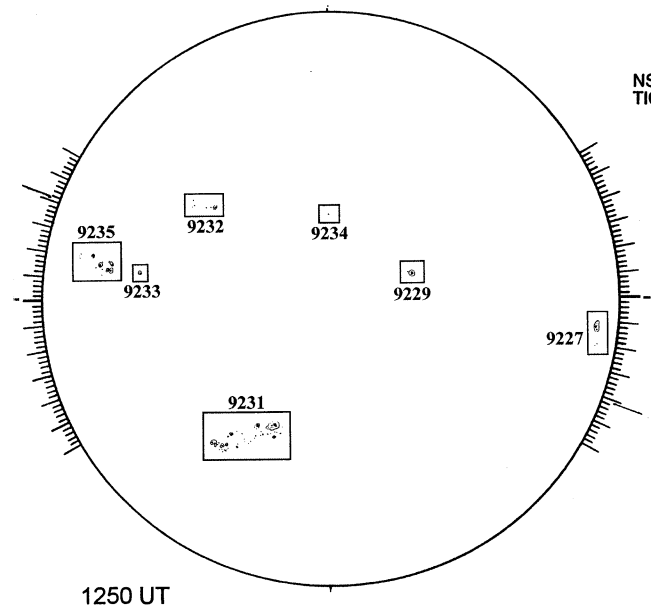

1250 UT

S

SACRAMENTO PEAK CORONA (1.15 Radii)

NSO / SACRAMENTO PEAK CORONAL DATA
TICK MARKS EVERY 25 MILLIONTHS

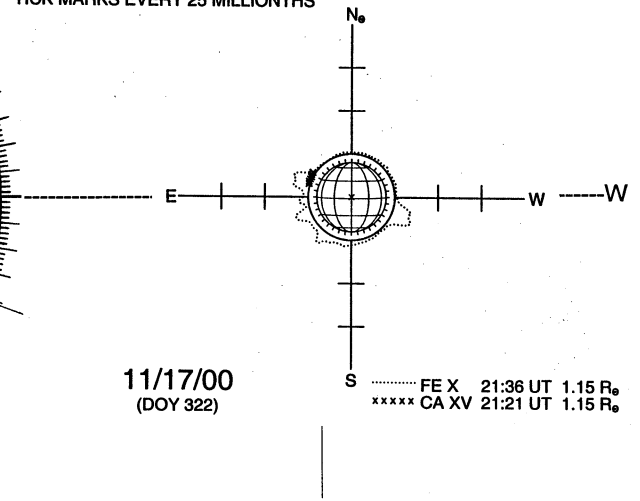

11/17/00
(DOY 322)

FE X 21:36 UT 1.15 $R_\odot$
CA XV 21:21 UT 1.15 $R_\odot$

S