NOVEMBER 1, 2000 (P= 24.46, Bo = 4.35, Lo = 301.16)

KITT PEAK MAGNETOGRAM

868.8 nm

Bright = +
Dark = -

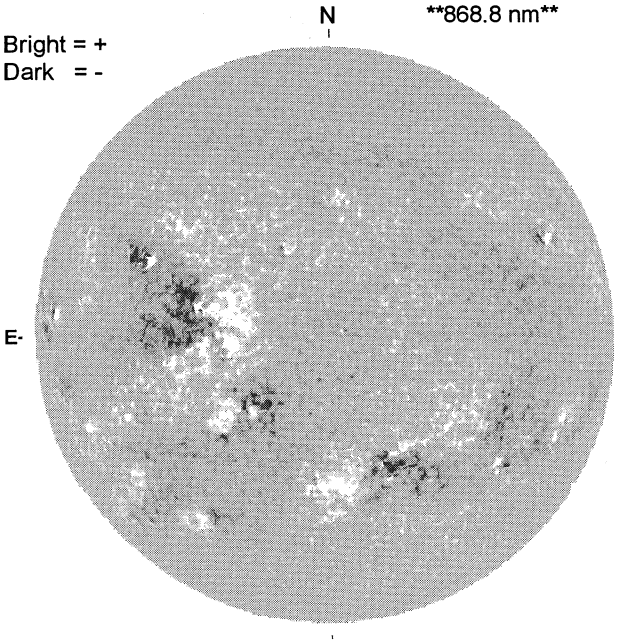

1739 UT

STANFORD MAGNETOGRAM

Solid = +
Dashed = -

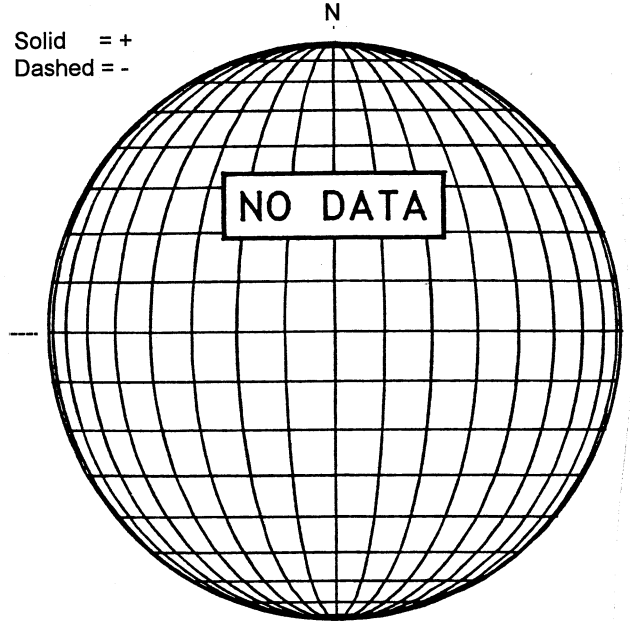

MT. WILSON MAGNETOGRAM

DeltaY = 13.1
DeltaX = 9.6

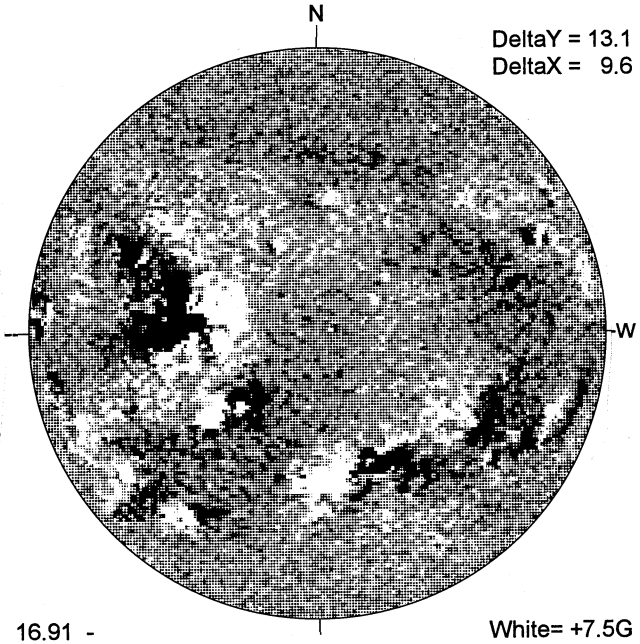

16.91 -
17.87 UT

White= +7.5G
Black = -7.5G

MEUDON H-ALPHA

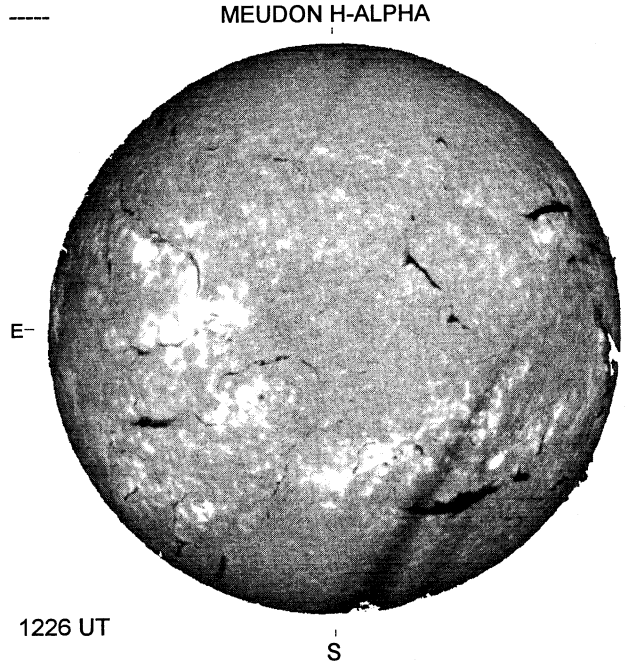

1226 UT

RAMEY SUNSPOT

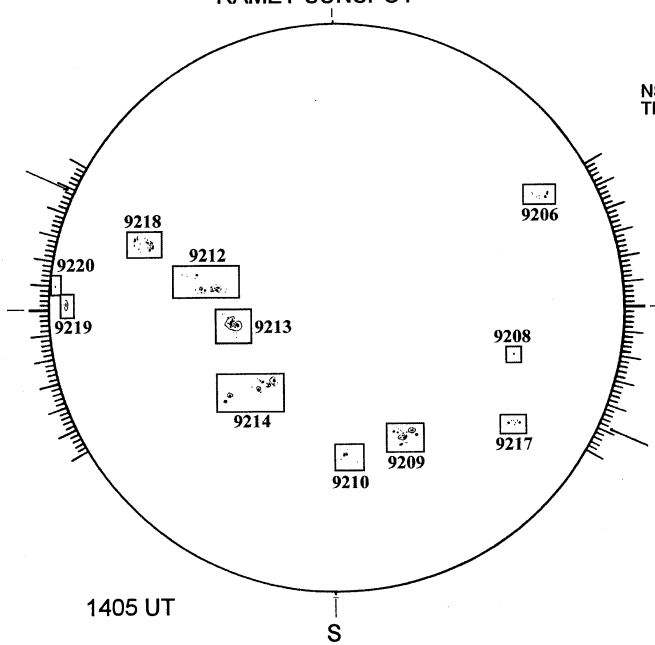

1405 UT

SACRAMENTO PEAK CORONA (1.15 Radii)

NSO / SACRAMENTO PEAK CORONAL DATA
TICK MARKS EVERY 25 MILLIONTHS

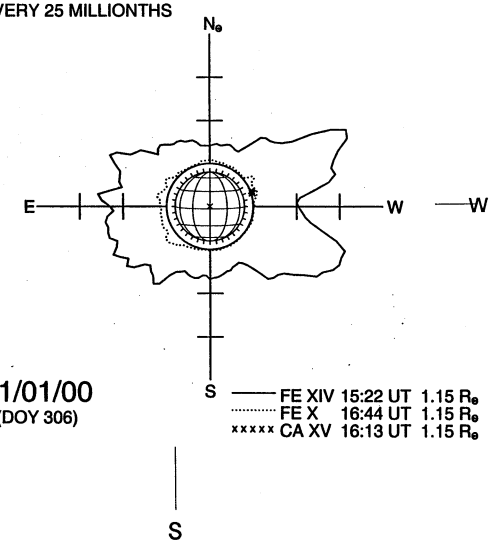

11/01/00
(DOY 306)