OCTOBER 29, 2000 (P= 24.93, Bo = 4.64, Lo = 340.72)

KITT PEAK MAGNETOGRAM

868.8 nm

Bright = +
Dark = -

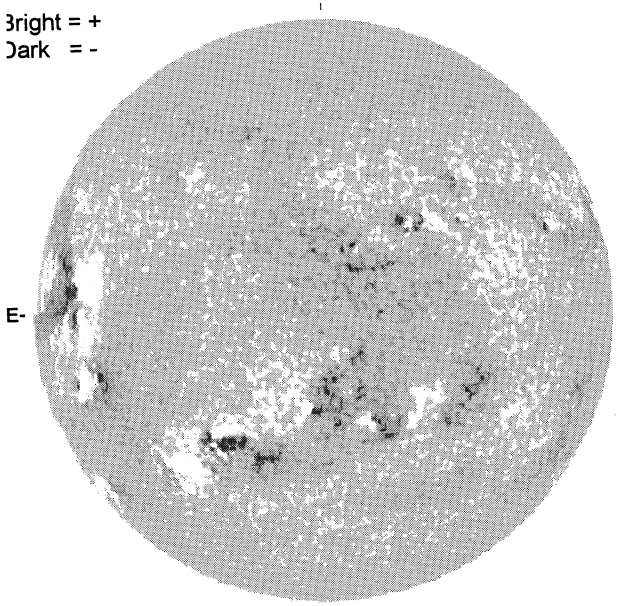

2101 UT

STANFORD MAGNETOGRAM

Solid = +
Dashed = -

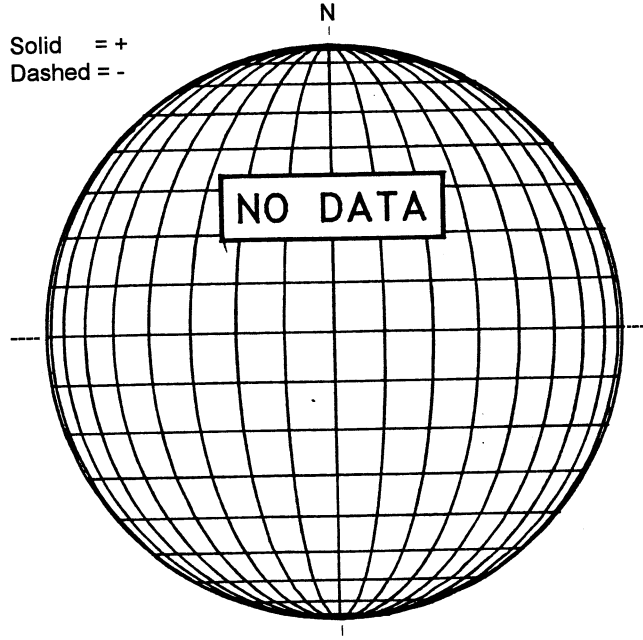

MT. WILSON MAGNETOGRAM

DeltaY =
DeltaX =

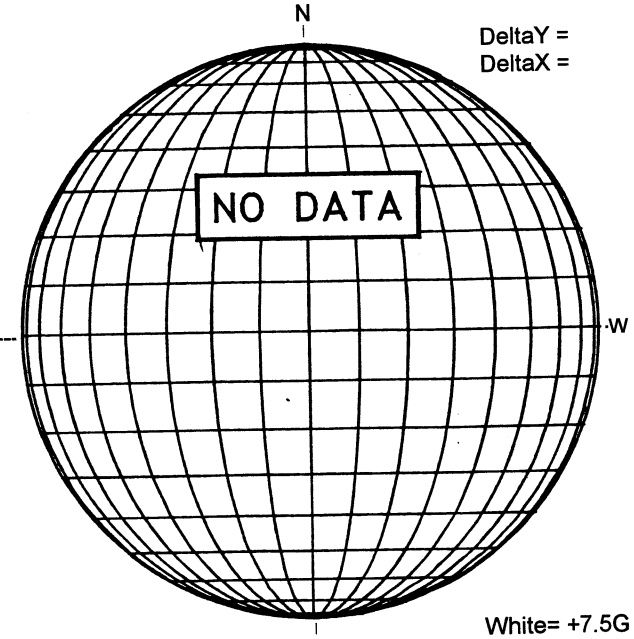

White= +7.5G
Black = -7.5G

MEUDON H-ALPHA

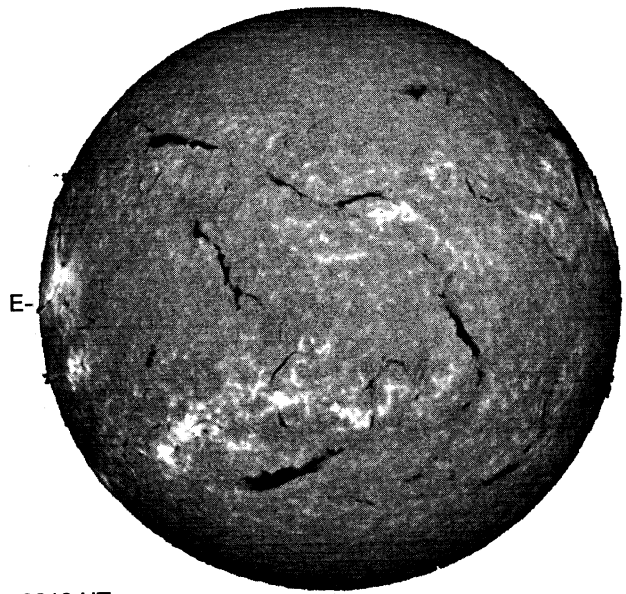

0813 UT

S

RAMEY SUNSPOT

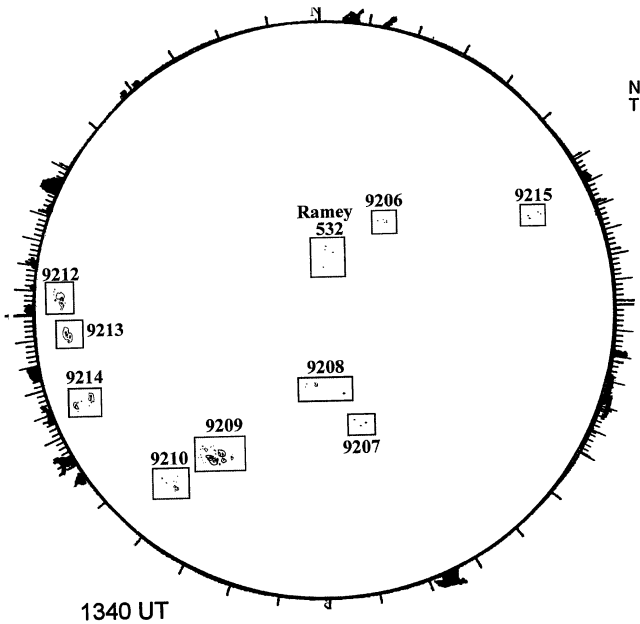

1340 UT
0619 UT LOMN Prom

SACRAMENTO PEAK CORONA (1.15 Radii)

NSO / SACRAMENTO PEAK CORONAL DATA
TICK MARKS EVERY 25 MILLIONTHS

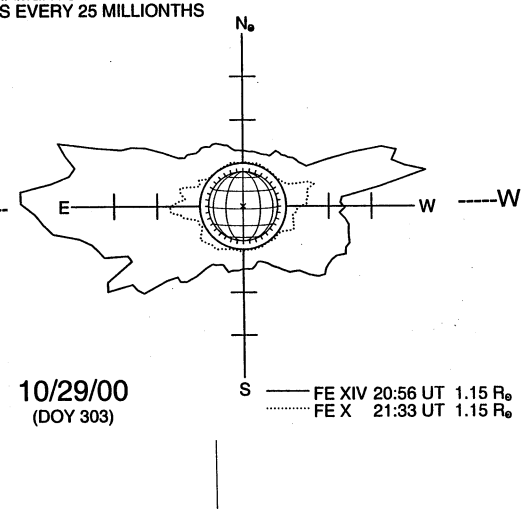

10/29/00
(DOY 303)

S