OCTOBER 16, 2000 (P= 26.16, Bo = 5.77, Lo = 152.17)

KITT PEAK MAGNETOGRAM

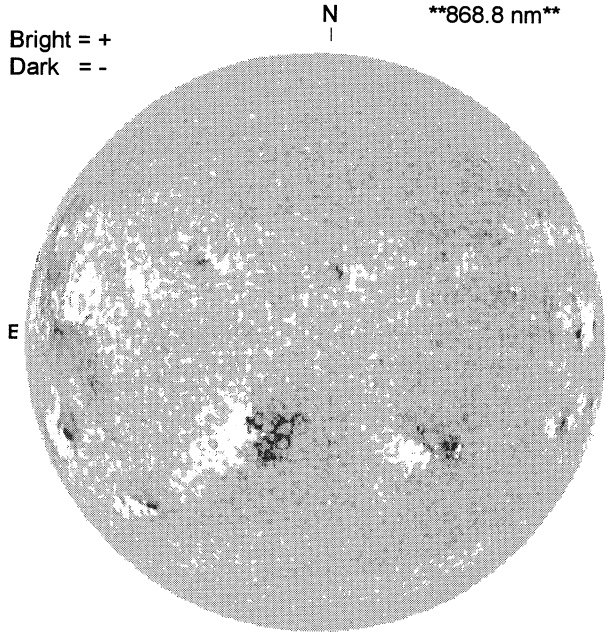

1546 UT

STANFORD MAGNETOGRAM

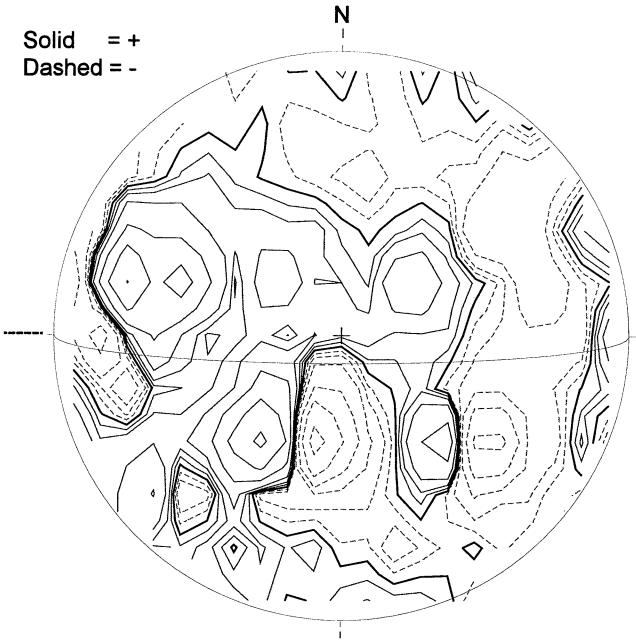

2203 UT

MT. WILSON MAGNETOGRAM

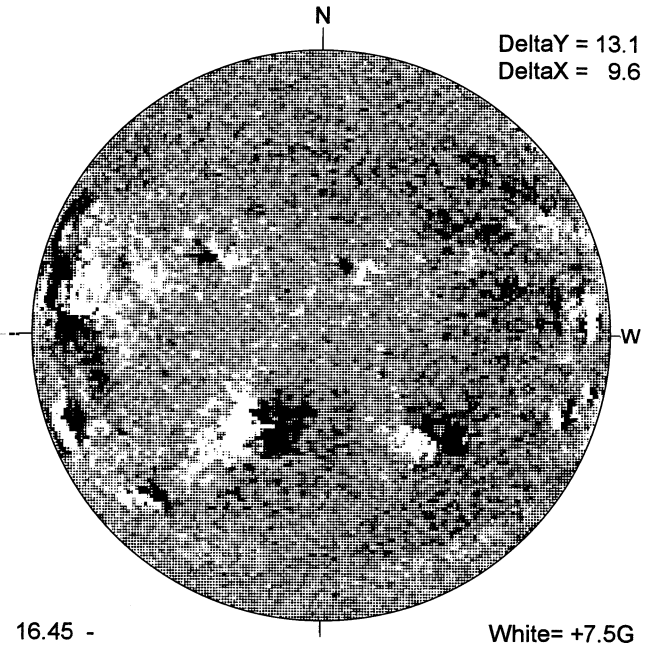

16.45 -
17.40 UT

White= +7.5G
Black = -7.5G

MEUDON H-ALPHA

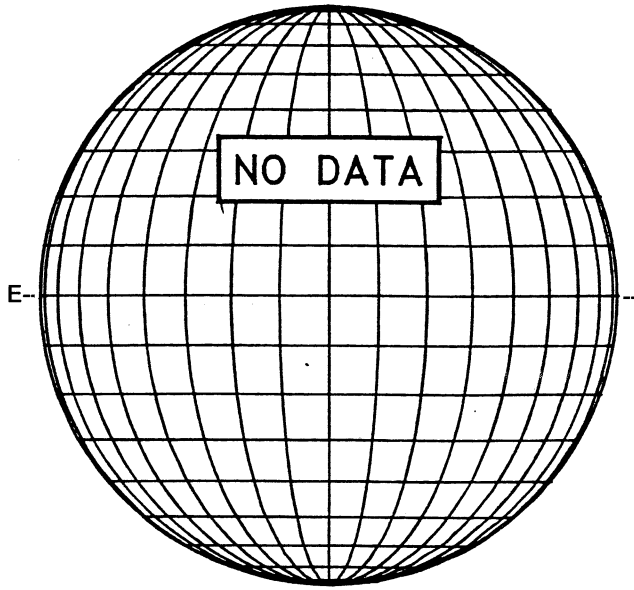

RAMEY SUNSPOT

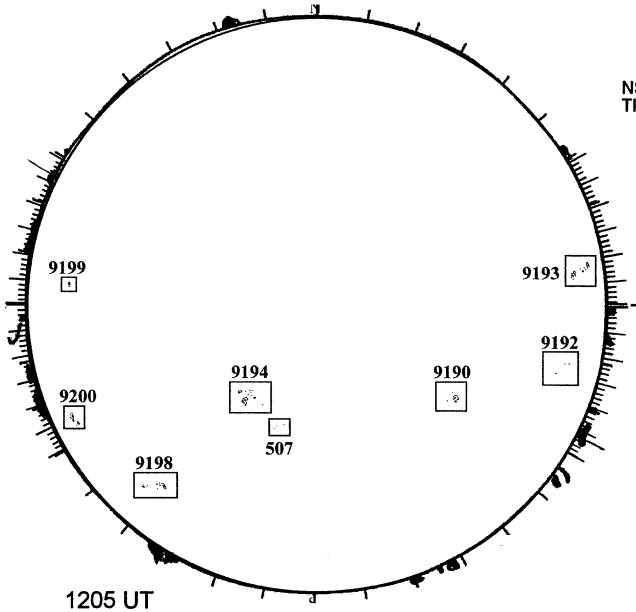

1205 UT
0832 UT LOMN Prom S
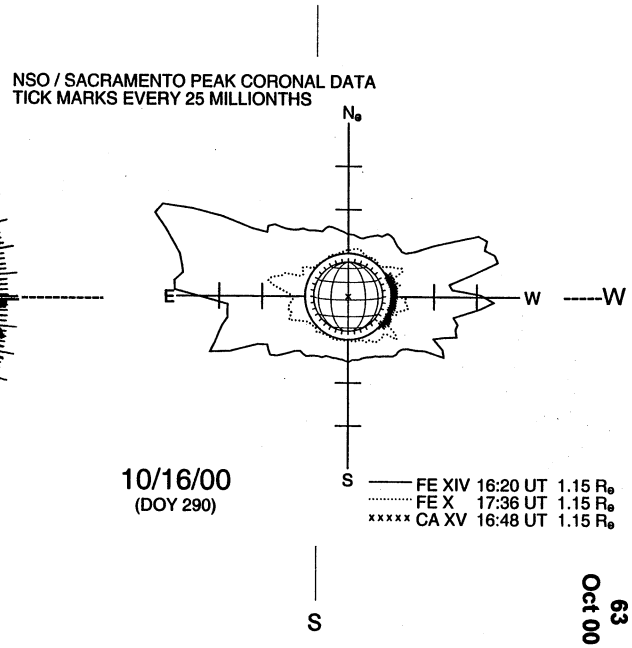
SACRAMENTO PEAK CORONA (1.15 Radii)