OCTOBER 14, 2000 (P= 26.23, Bo = 5.92, Lo = 178.56)

KITT PEAK MAGNETOGRAM

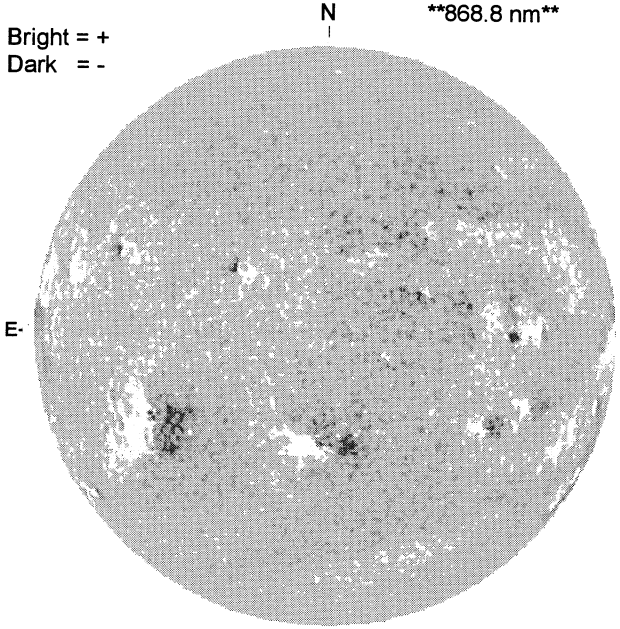

1855 UT

STANFORD MAGNETOGRAM

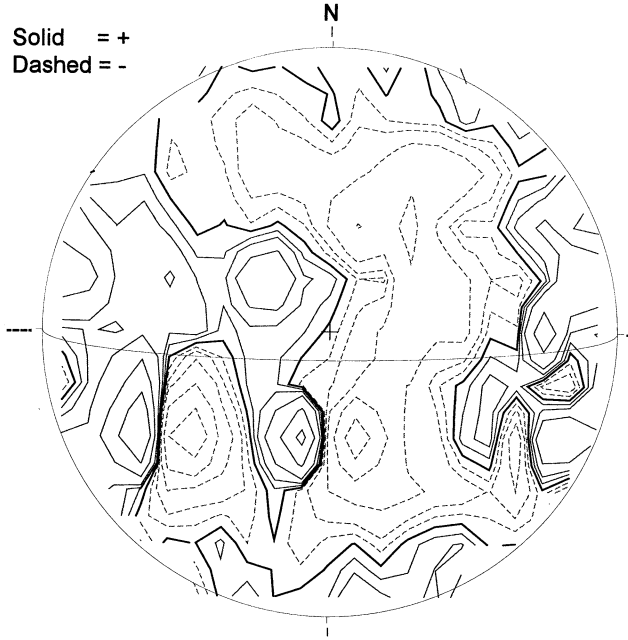

2108 UT

MT. WILSON MAGNETOGRAM

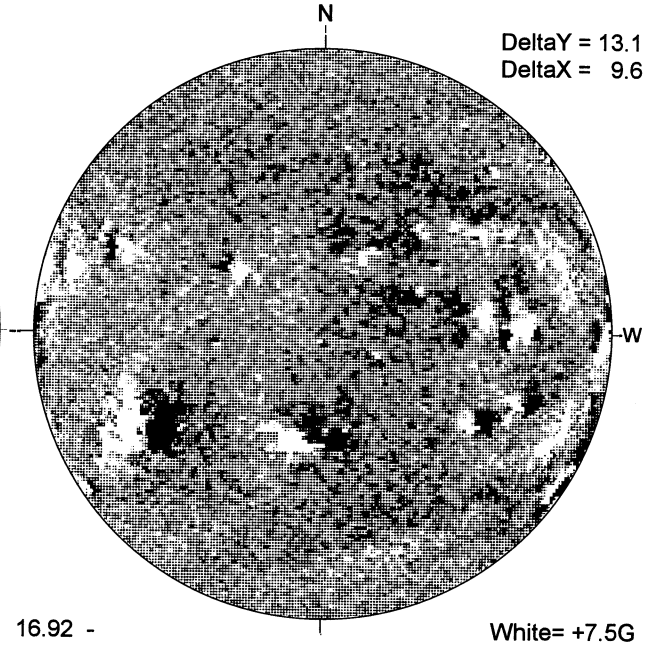

16.92 -
17.87 UT

White= +7.5G
Black = -7.5G

MEUDON H-ALPHA

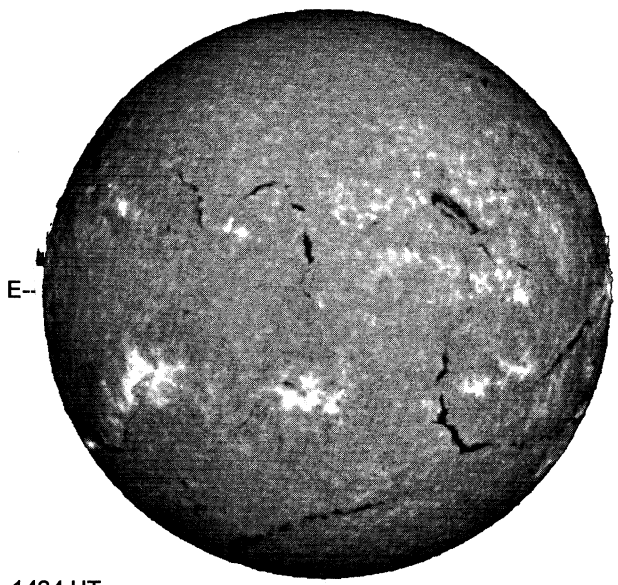

1434 UT

S

RAMEY SUNSPOT

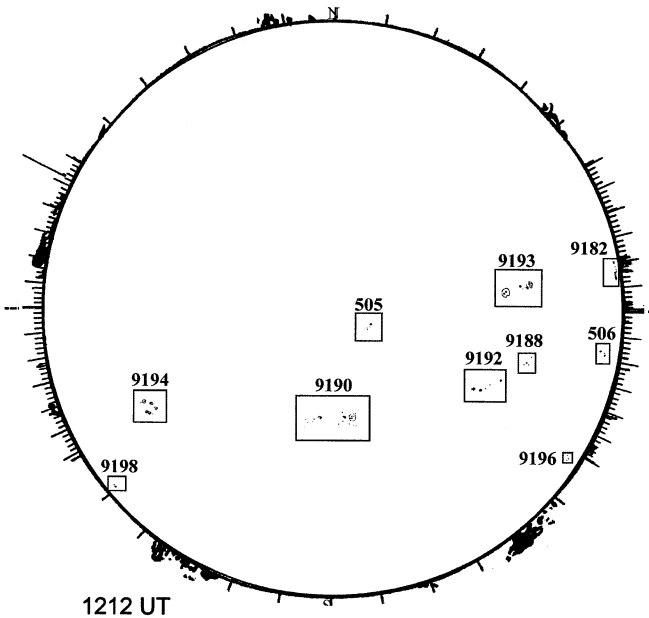

1212 UT
1012 UT LOMN Prom S

SACRAMENTO PEAK CORONA (1.15 Radii)----

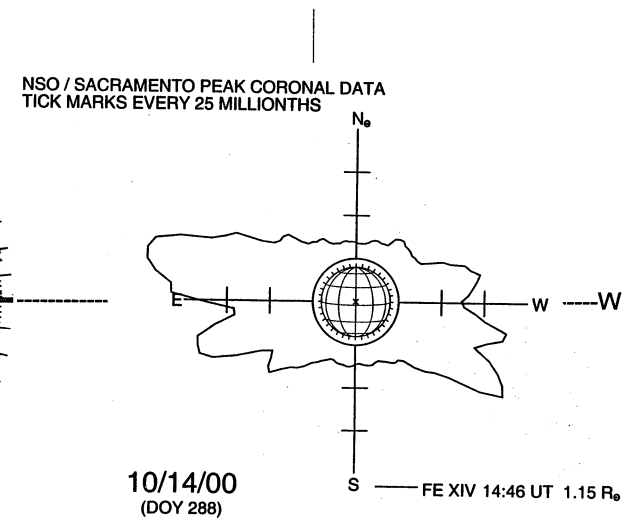

10/14/00
(DOY 288)

S

61
Oct 00