OCTOBER 5, 2000 (P= 26.20, Bo = 6.50, Lo = 297.29)

KITT PEAK MAGNETOGRAM

868.8 nm

Bright = +
Dark = -

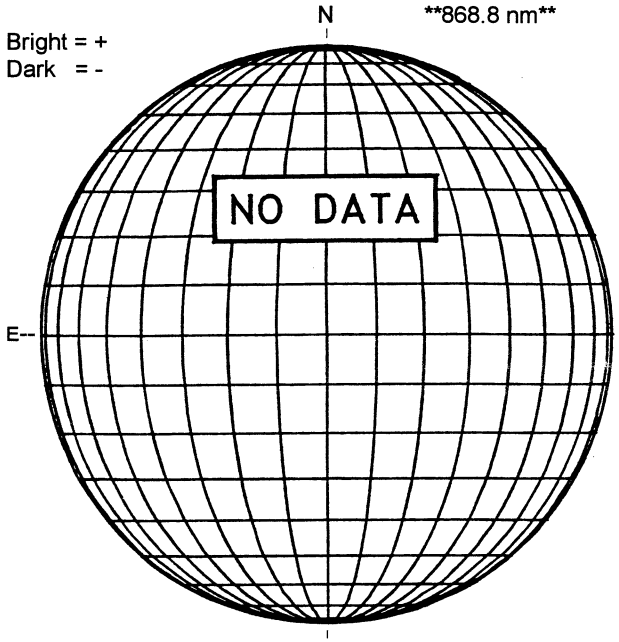

STANFORD MAGNETOGRAM

Solid = +
Dashed = -

2200 UT

MT. WILSON MAGNETOGRAM

DeltaY = 13.1
DeltaX = 9.6

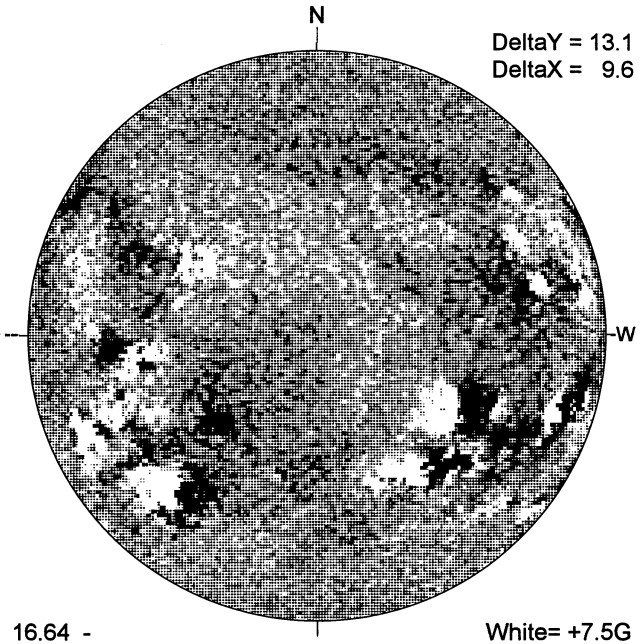

16.64 -
17.58 UT

White= +7.5G
Black = -7.5G

MEUDON H-ALPHA

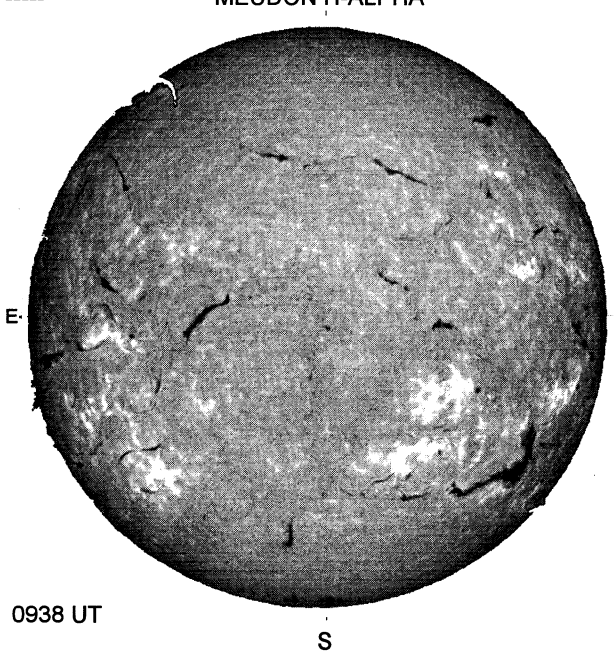

0938 UT

RAMEY SUNSPOT

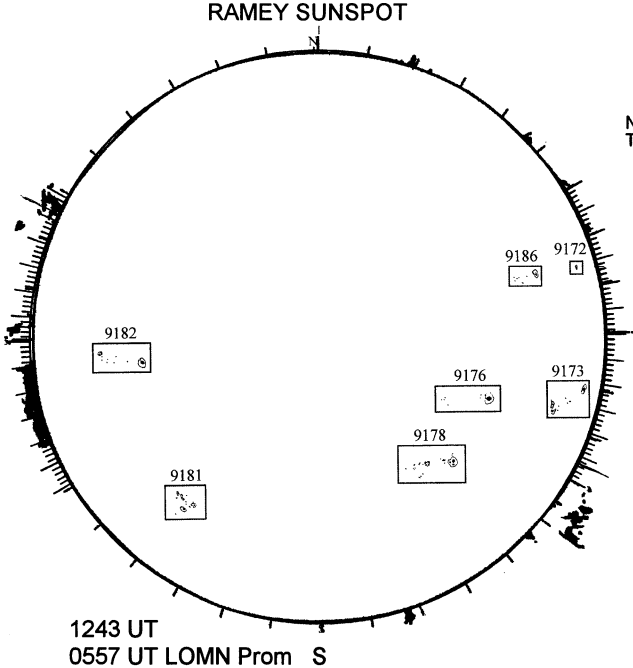

1243 UT
0557 UT LOMN Prom S

SACRAMENTO PEAK CORONA (1.15 Radii)

NSO / SACRAMENTO PEAK CORONAL DATA
TICK MARKS EVERY 25 MILLIONTHS

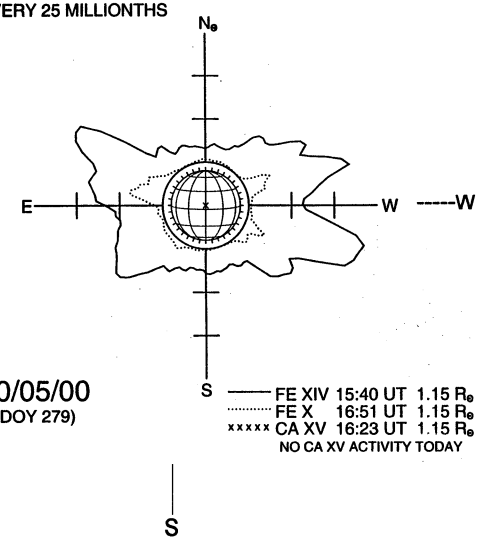

10/05/00
(DOY 279)

FE XIV 15:40 UT 1.15 $R_\odot$
FE X 16:51 UT 1.15 $R_\odot$
xxxxx CA XV 16:23 UT 1.15 $R_\odot$
NO CA XV ACTIVITY TODAY

S