OCTOBER 3, 2000 (P= 26.11, Bo = 6.61, Lo = 323.68)

KITT PEAK MAGNETOGRAM

868.8 nm

Bright = +
Dark = -

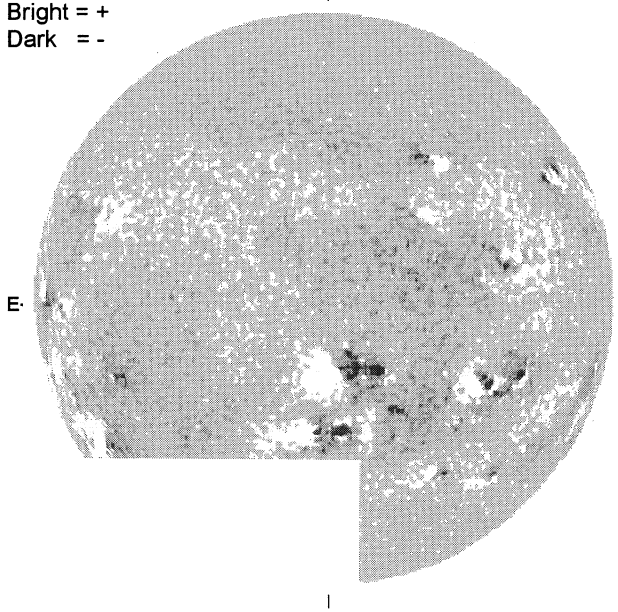

1535 UT

STANFORD MAGNETOGRAM

Solid = +
Dashed = -

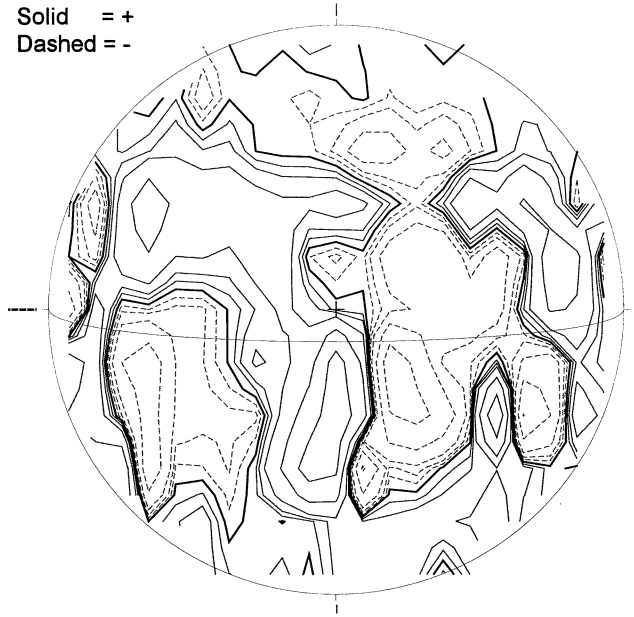

2226 UT

MT. WILSON MAGNETOGRAM

DeltaY = 13.1
DeltaX = 9.6

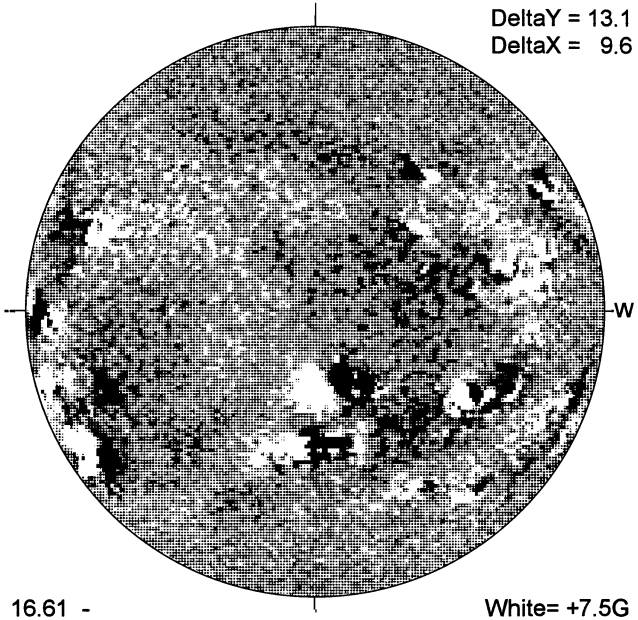

16.61 -
17.55 UT

White= +7.5G
Black = -7.5G

MEUDON H-ALPHA

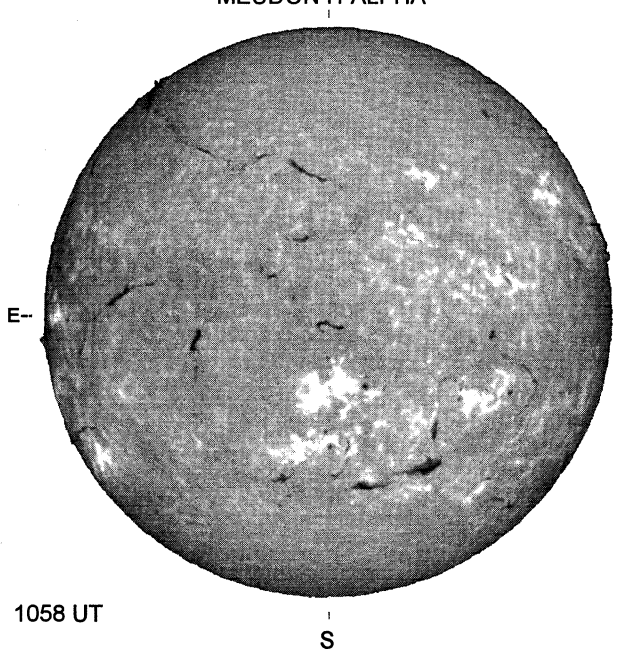

1058 UT

RAMEY SUNSPOT

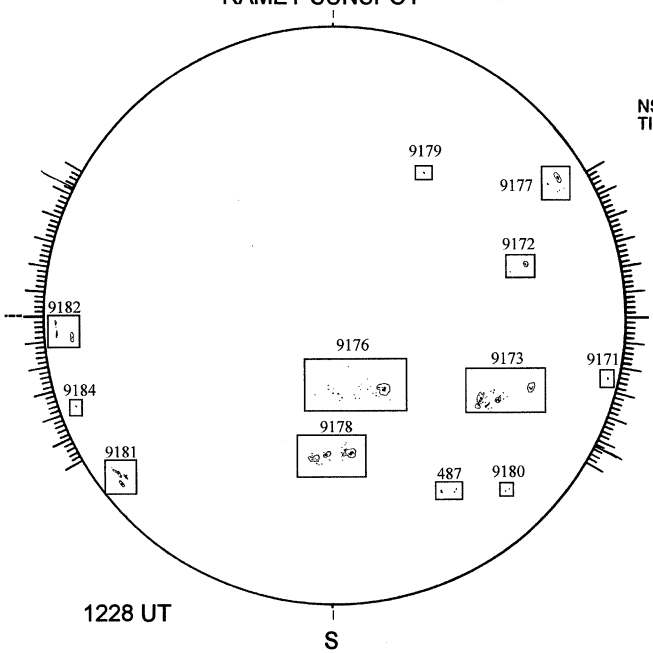

1228 UT

SACRAMENTO PEAK CORONA (1.15 Radii)

NSO / SACRAMENTO PEAK CORONAL DATA
TICK MARKS EVERY 25 MILLIONTHS

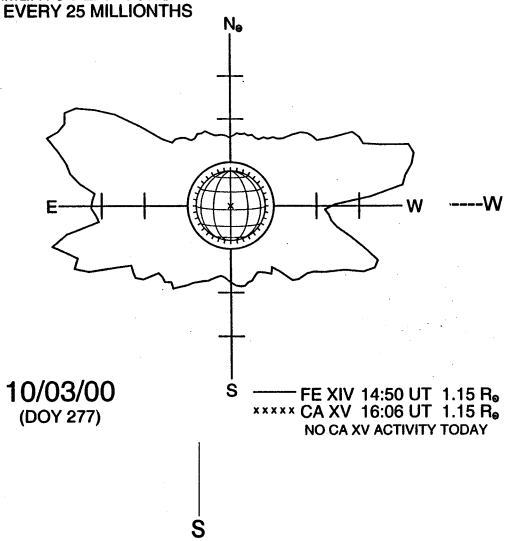

10/03/00
(DOY 277)

—— FE XIV 14:50 UT 1.15 $R_\odot$
xxxxx CA XV 16:06 UT 1.15 $R_\odot$
NO CA XV ACTIVITY TODAY