OCTOBER 1, 2000 (P= 26.00, Bo = 6.70, Lo = 350.07)

KITT PEAK MAGNETOGRAM

Bright = +
Dark = -

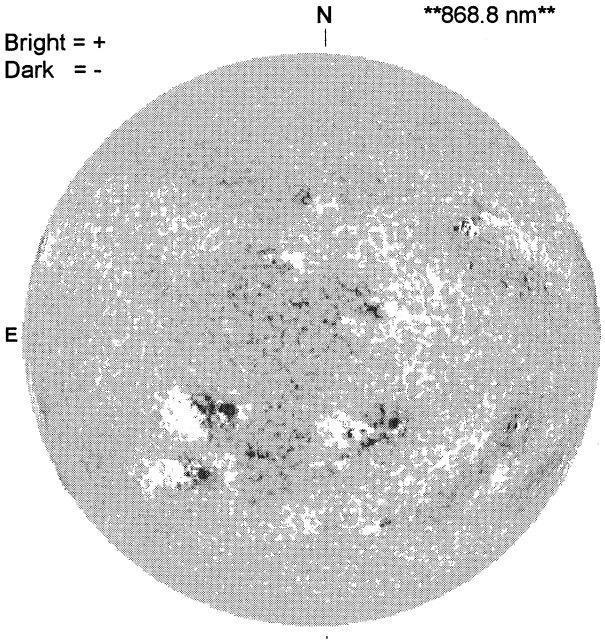

1423 UT

STANFORD MAGNETOGRAM

Solid = +
Dashed = -

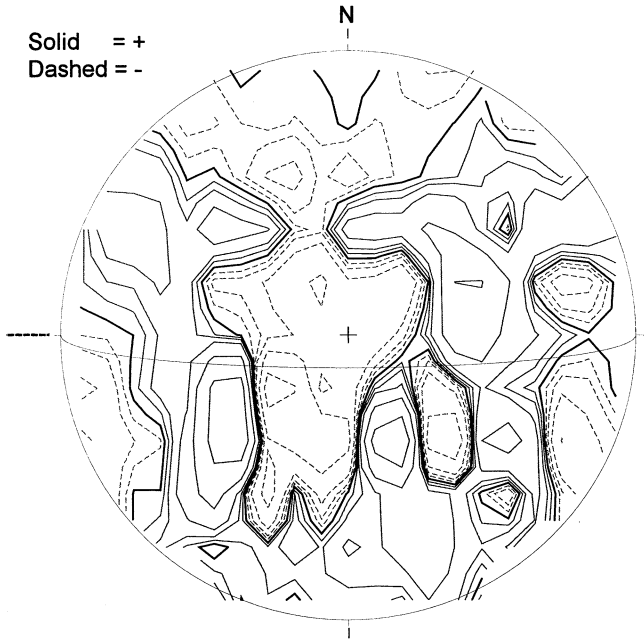

2211 UT

MT. WILSON MAGNETOGRAM

DeltaY = 13.1
DeltaX = 9.6

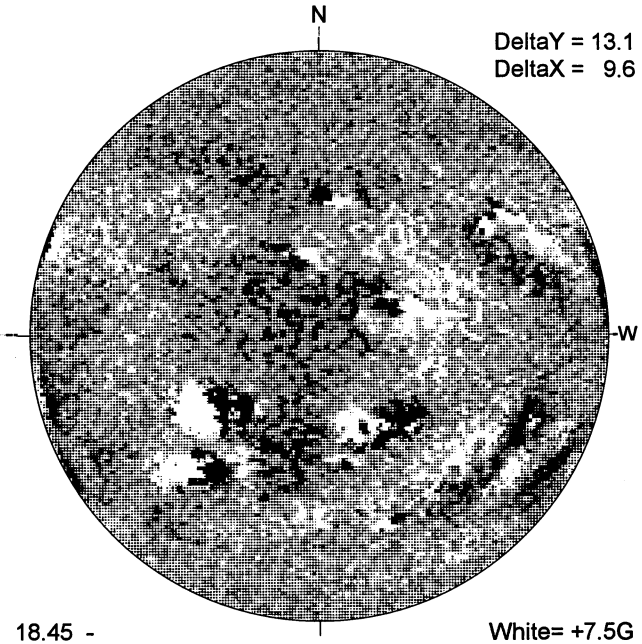

18.45 -
19.40 UT

White= +7.5G
Black = -7.5G

MEUDON H-ALPHA

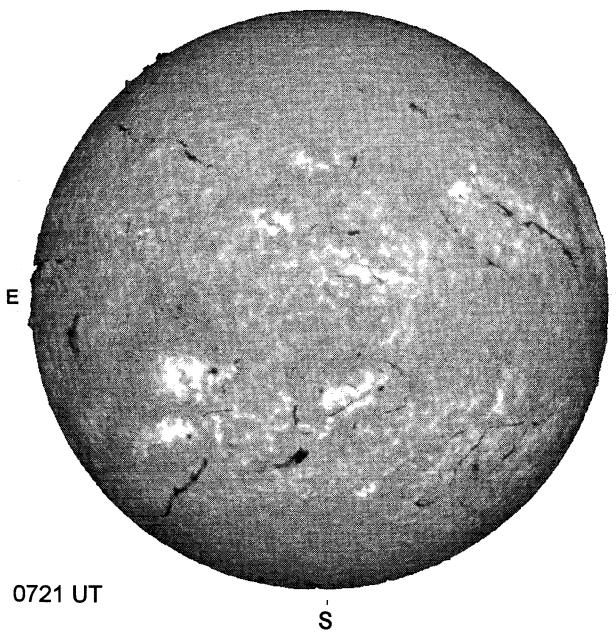

0721 UT

RAMEY SUNSPOT

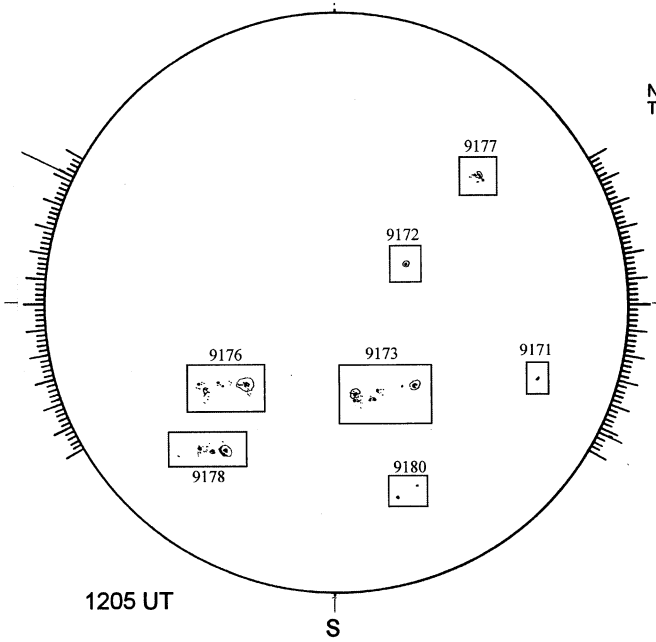

1205 UT

SACRAMENTO PEAK CORONA (1.15 Radii)

NSO / SACRAMENTO PEAK CORONAL DATA
TICK MARKS EVERY 25 MILLIONTHS

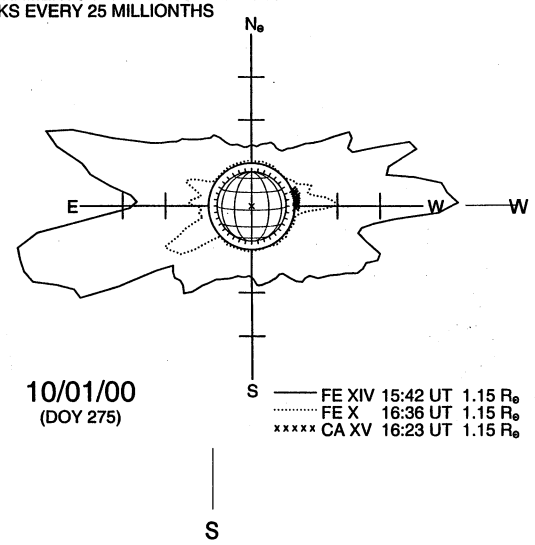

10/01/00
(DOY 275)