SEPTEMBER 30, 2000 (P= 25.93, Bo = 6.75, Lo = 3.27)

KITT PEAK MAGNETOGRAM

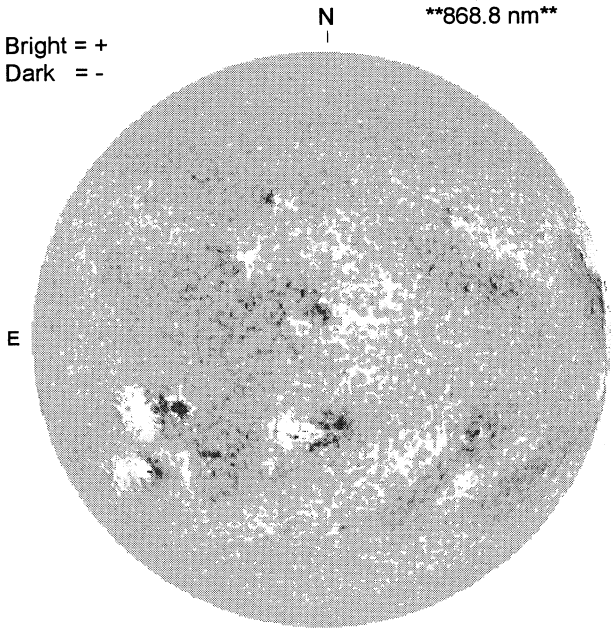

1513 UT

STANFORD MAGNETOGRAM

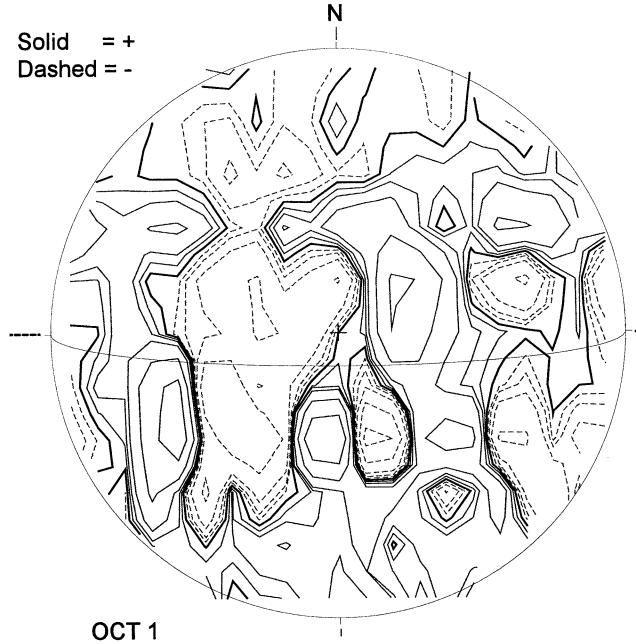

OCT 1
0001 UT

MT. WILSON MAGNETOGRAM

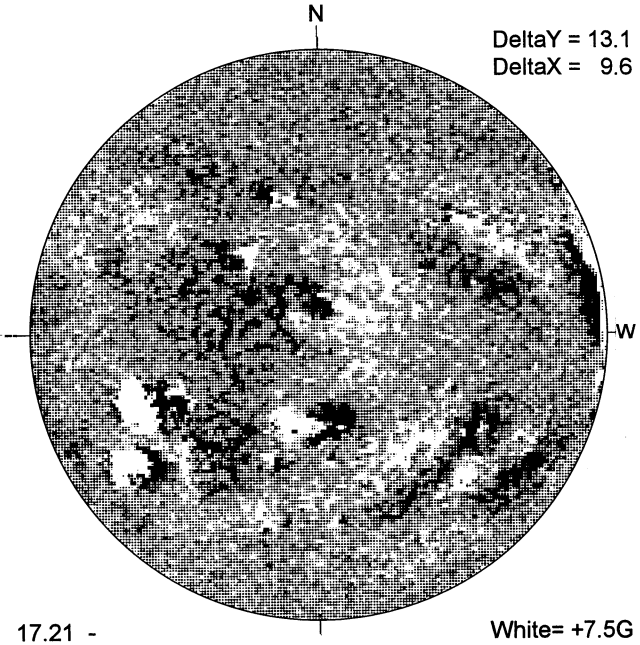

17.21 -
18.15 UT

White= +7.5G
Black = -7.5G

MEUDON H-ALPHA

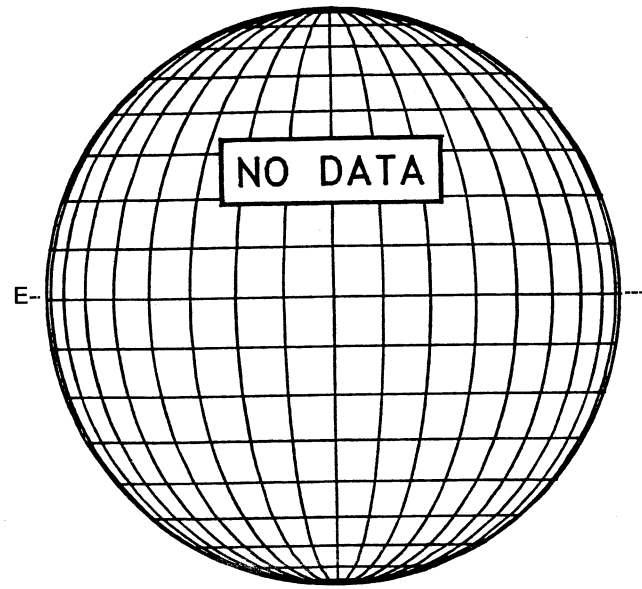

RAMEY SUNSPOT

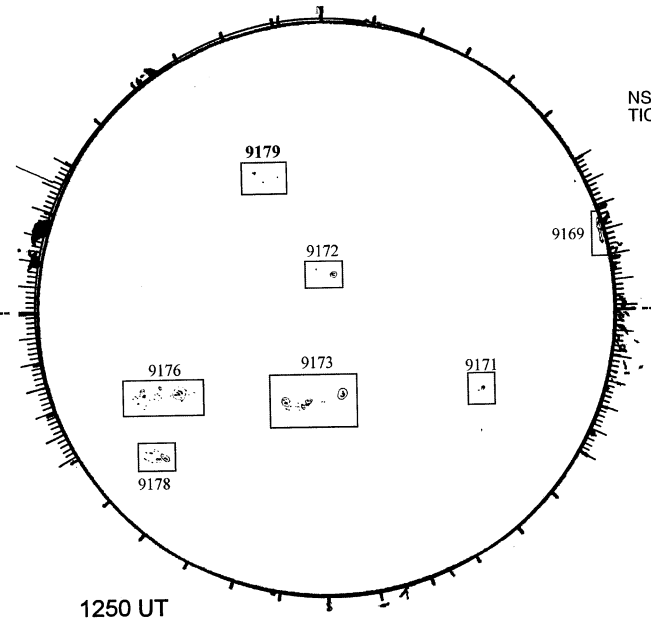

1250 UT
1012 UT LOMN Prom S

SACRAMENTO PEAK CORONA (1.15 Radii)

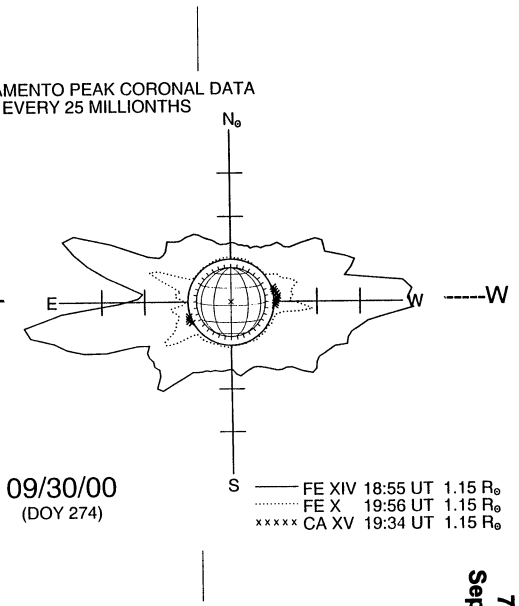

09/30/00
(DOY 274)

77
Sep 00