SEPTEMBER 29, 2000 (P= 25.86, Bo = 6.80, Lo = 16.46)

KITT PEAK MAGNETOGRAM

N

868.8 nm

Bright = +
Dark = -

E-

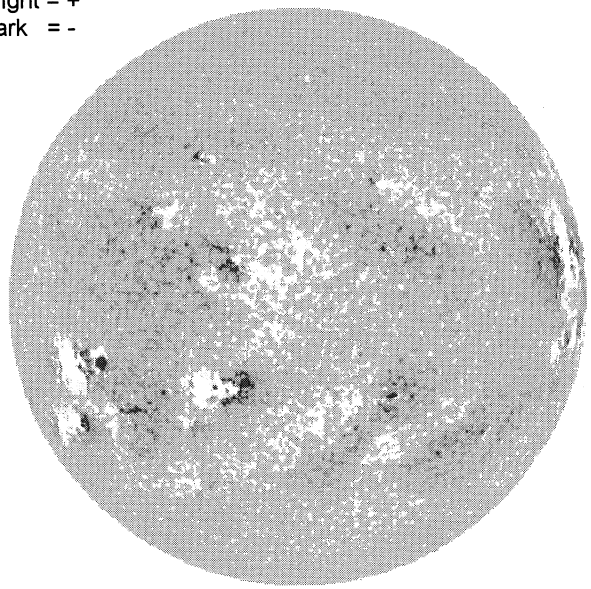

1515 UT

STANFORD MAGNETOGRAM

N

Solid = +
Dashed = -

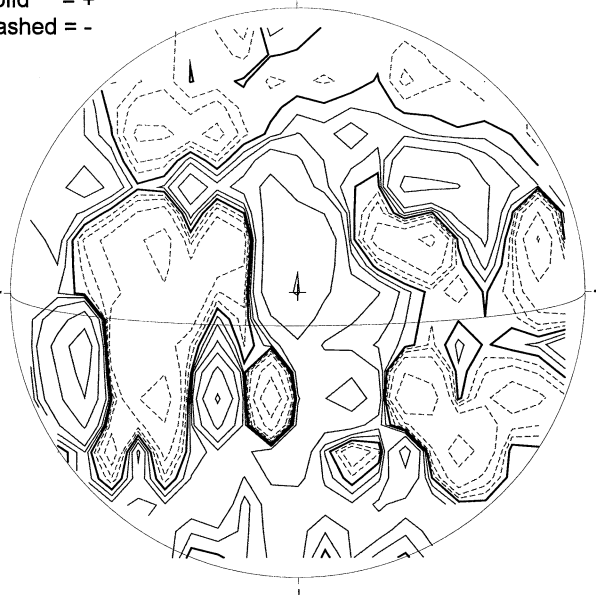

2256 UT

MT. WILSON MAGNETOGRAM

N

DeltaY = 13.1
DeltaX = 9.6

-W

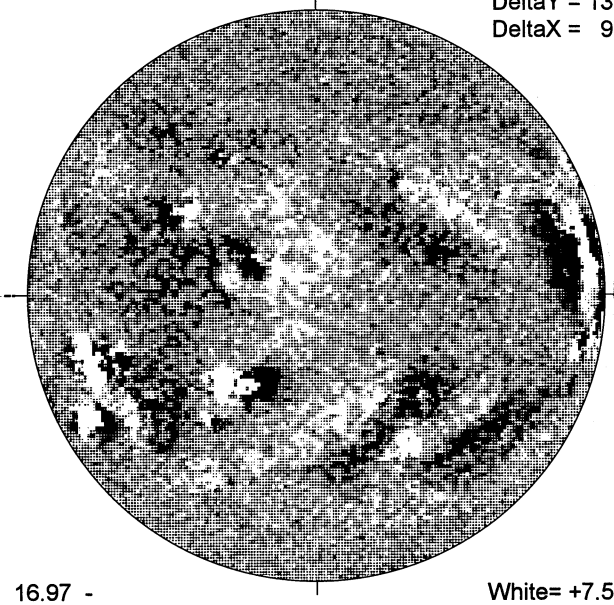

16.97 -
17.92 UT

White= +7.5G
Black = -7.5G

MEUDON H-ALPHA

E--

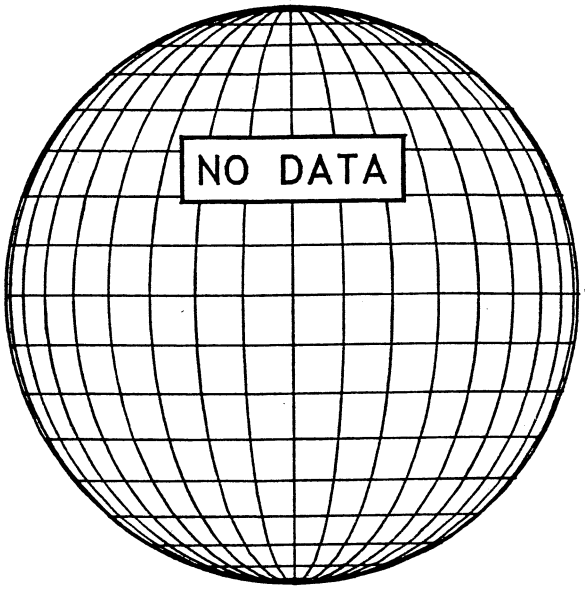

S

RAMEY SUNSPOT

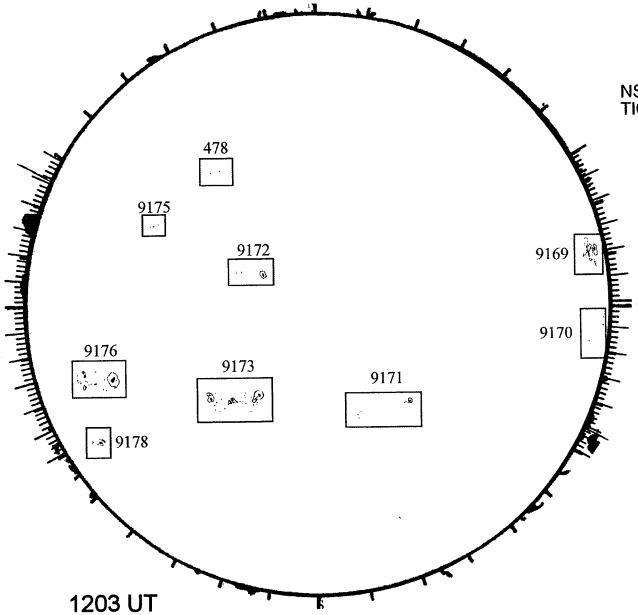

1203 UT
0536 UT LOMN Prom S

SACRAMENTO PEAK CORONA (1.15 Radii)----

NSO / SACRAMENTO PEAK CORONAL DATA
TICK MARKS EVERY 25 MILLIONTHS

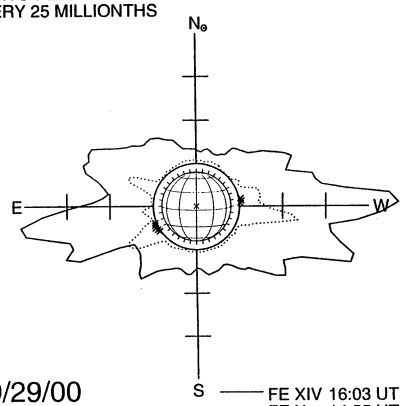

09/29/00
(DOY 273)

FE XIV 16:03 UT 1.15 R⊙
FE X 14:55 UT 1.15 R⊙
xxxxx CA XV 16:36 UT 1.15 R⊙

S