SEPTEMBER 28, 2000 (P= 25.77, Bo = 6.84, Lo = 29.66)

KITT PEAK MAGNETOGRAM

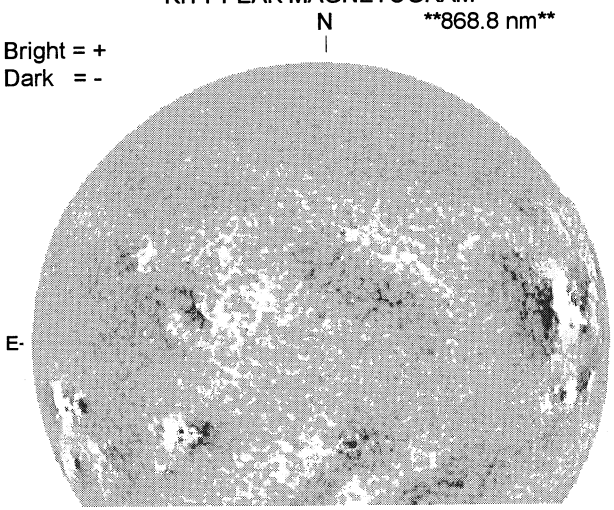

1602 UT

STANFORD MAGNETOGRAM

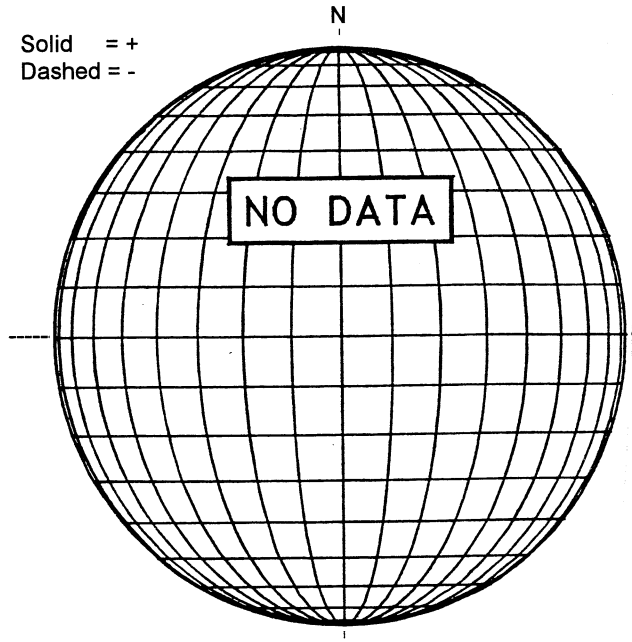

MT. WILSON MAGNETOGRAM

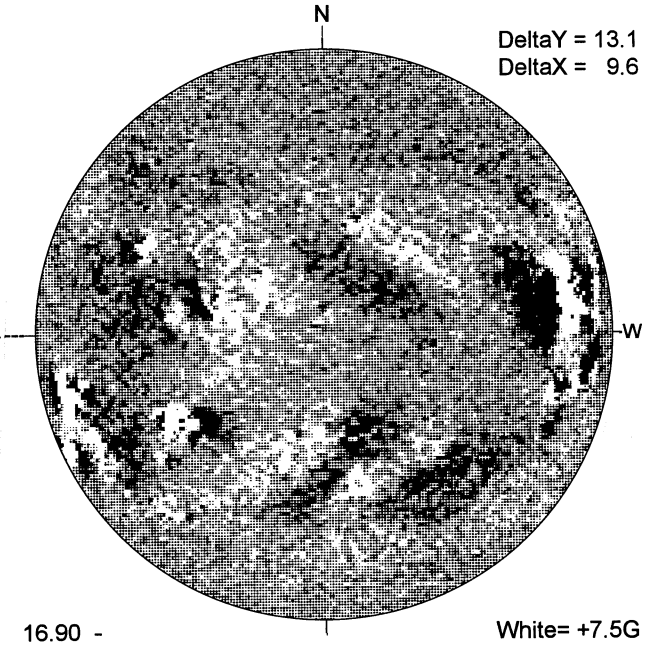

16.90 -
17.84 UT

MEUDON H-ALPHA

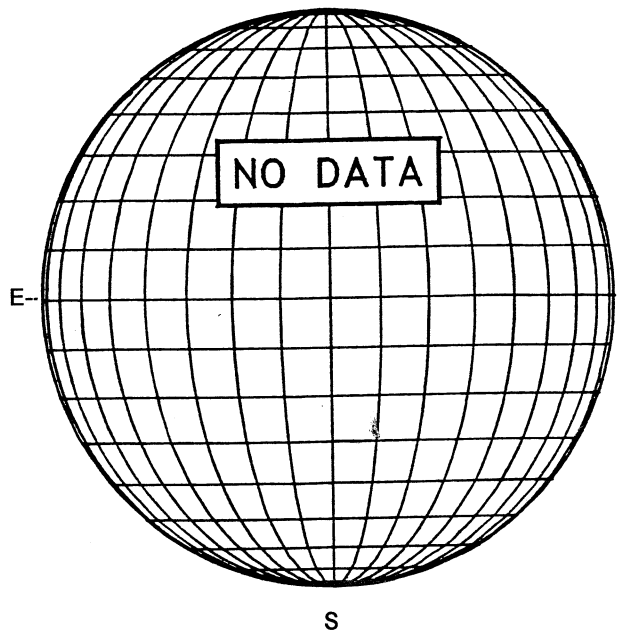

HOLLOMAN SUNSPOT

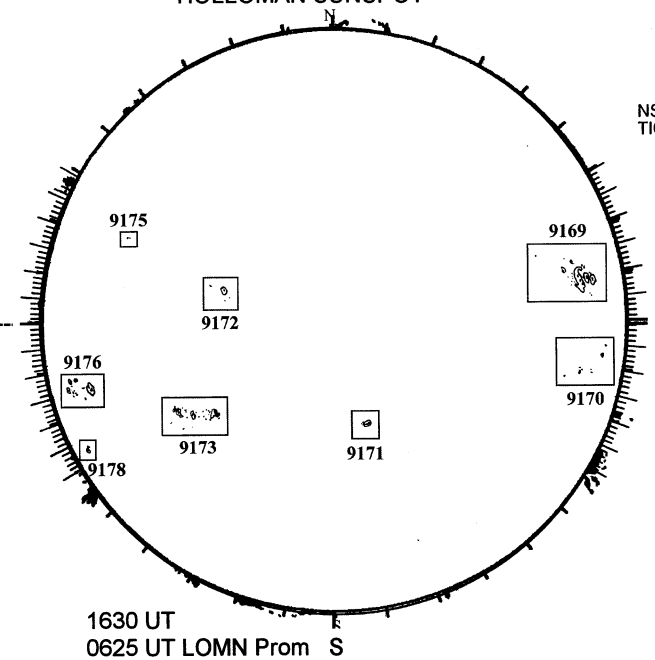

1630 UT
0625 UT LOMN Prom

SACRAMENTO PEAK CORONA (1.15 Radii)----

NSO / SACRAMENTO PEAK CORONAL DATA
TICK MARKS EVERY 25 MILLIONTHS

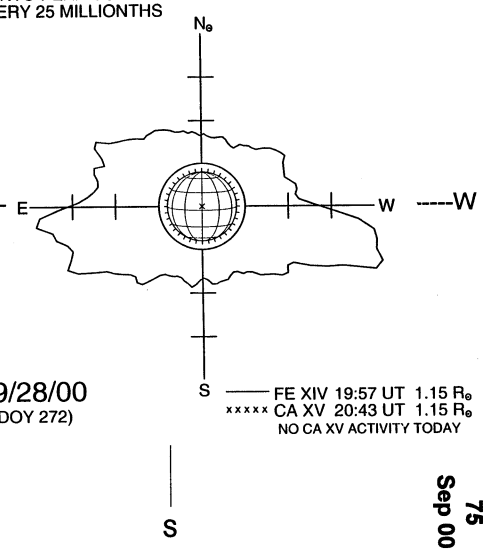

09/28/00
(DOY 272)

S

75
Sep 00