SEPTEMBER 26, 2000 (P= 25.59, Bo = 6.92, Lo = 56.05)

KITT PEAK MAGNETOGRAM

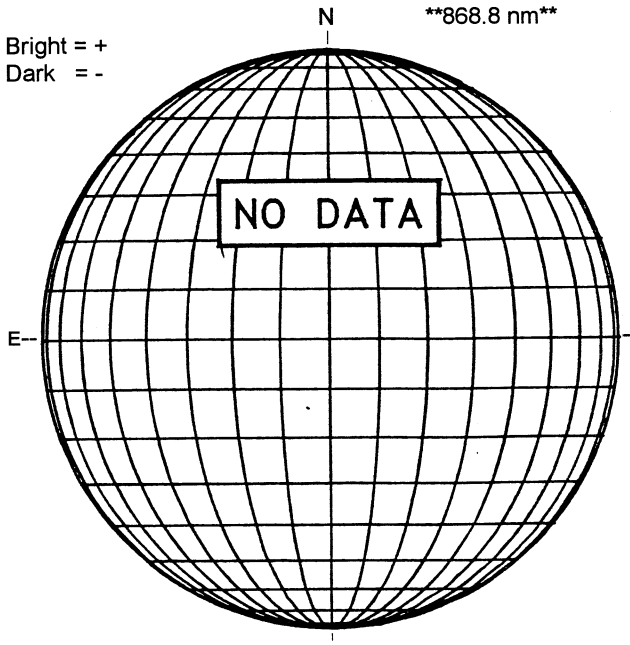

STANFORD MAGNETOGRAM

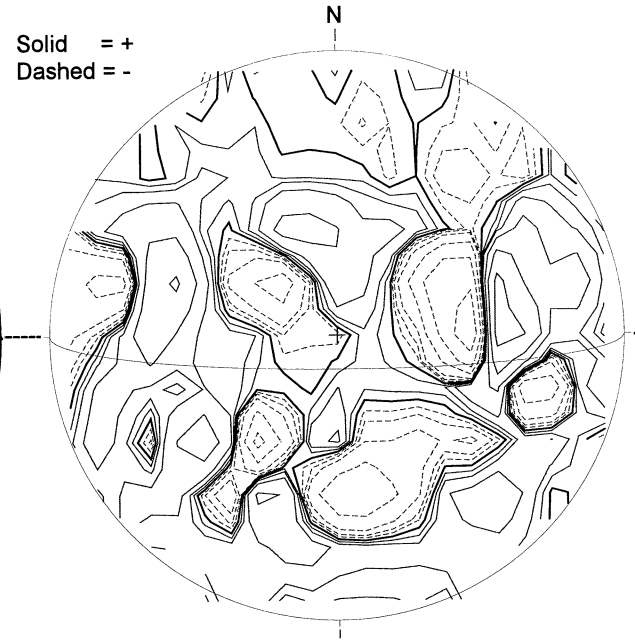

2206 UT

MT. WILSON MAGNETOGRAM

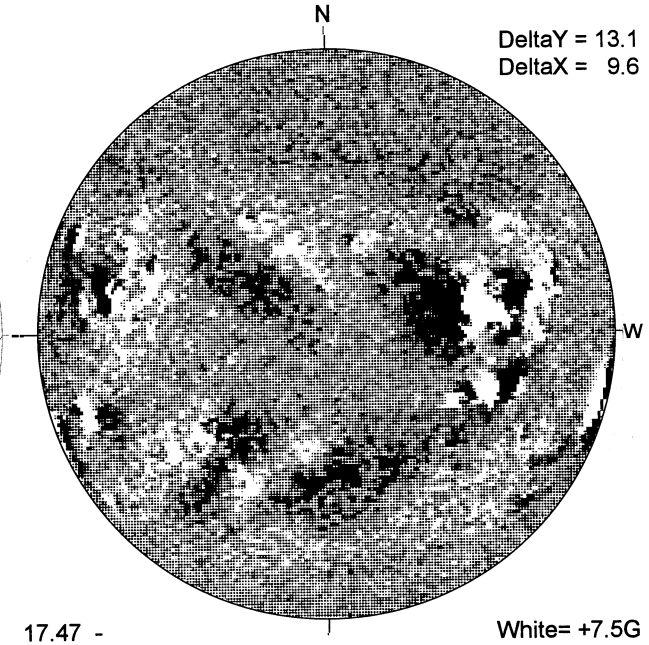

17.47 -
18.41 UT

MEUDON H-ALPHA

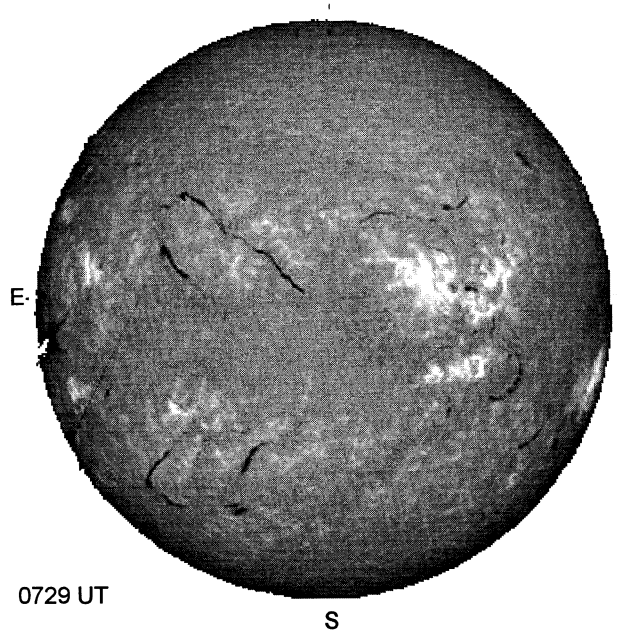

0729 UT

RAMEY SUNSPOT

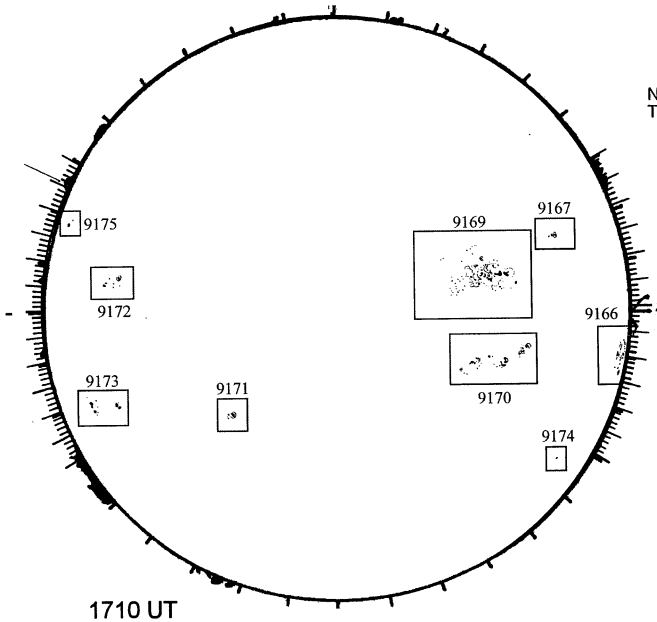

1710 UT
1036 UT LOMN Prom S

SACRAMENTO PEAK CORONA (1.15 Radii)----

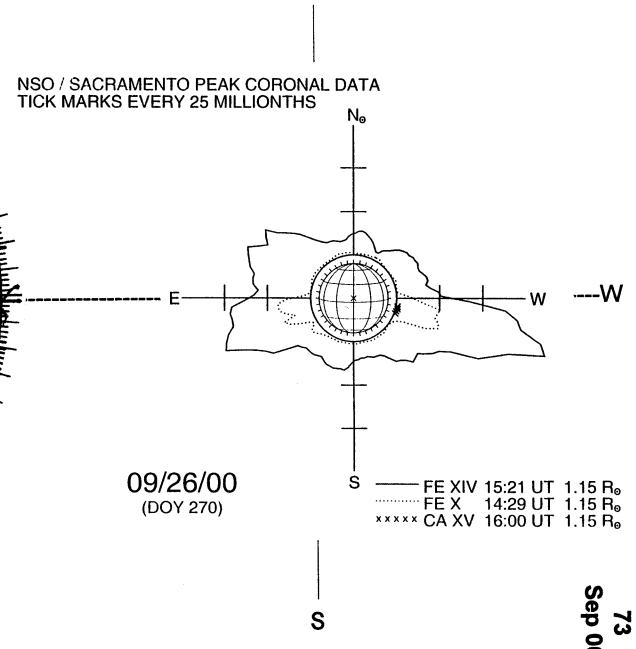

S

73
Sep 00