SEPTEMBER 25, 2000 (P= 25.49, Bo = 6.95, Lo = 69.25)

KITT PEAK MAGNETOGRAM

868.8 nm

Bright = +
Dark = -

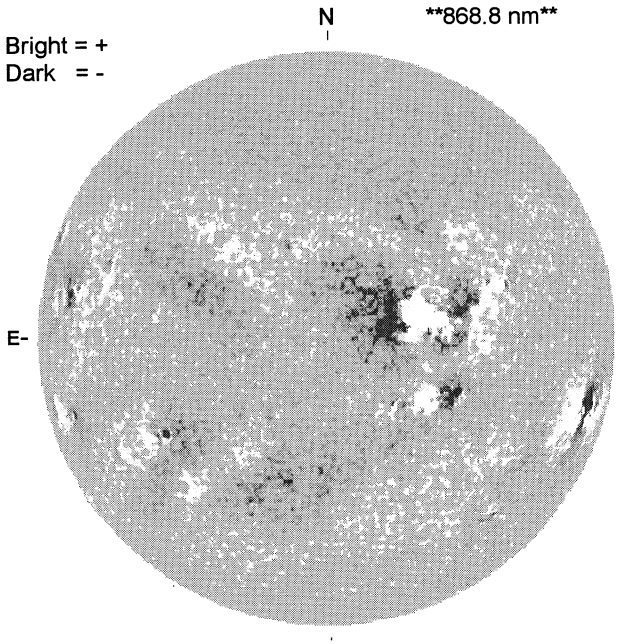

1610 UT

STANFORD MAGNETOGRAM

Solid = +
Dashed = -

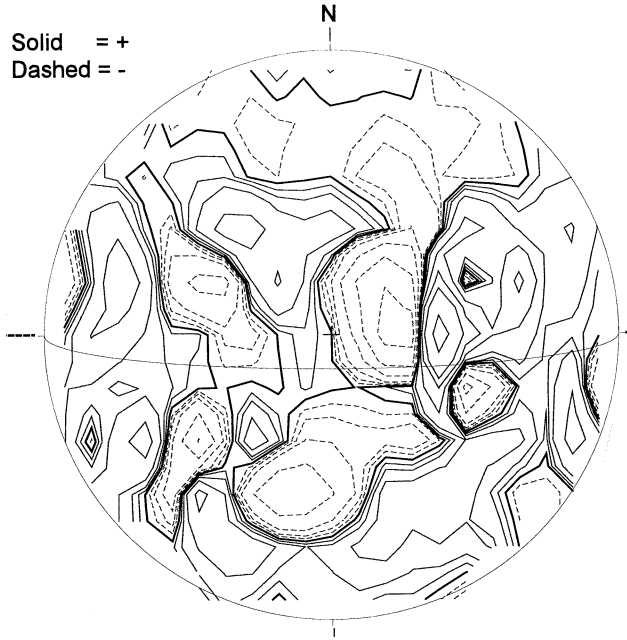

2127 UT

MT. WILSON MAGNETOGRAM

DeltaY = 13.1
DeltaX = 9.6

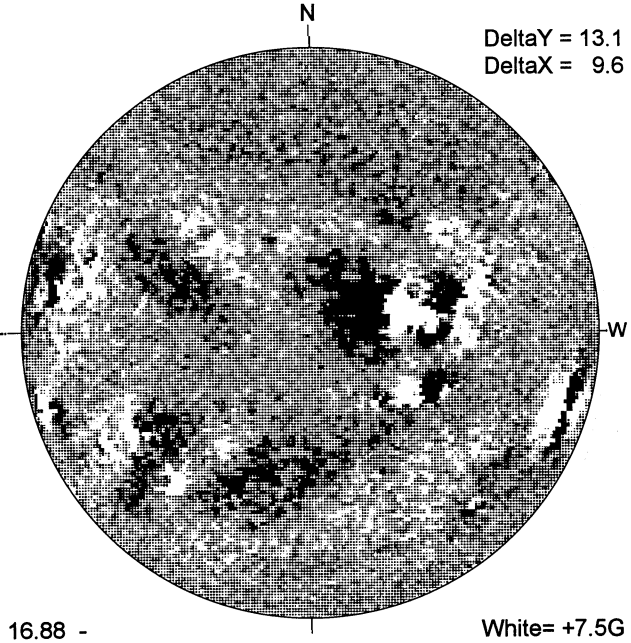

16.88 -
17.82 UT

White= +7.5G
Black = -7.5G

MEUDON H-ALPHA

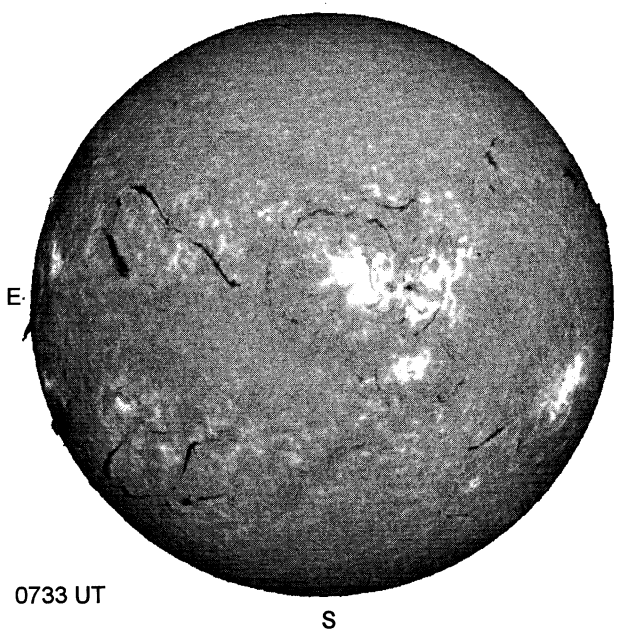

0733 UT

RAMEY SUNSPOT

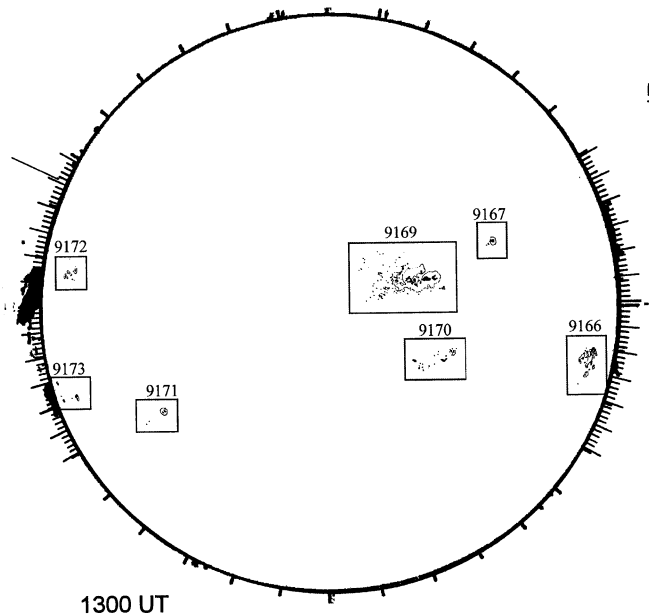

1300 UT
0728 UT LOMN Prom S

SACRAMENTO PEAK CORONA (1.15 Radii)

NSO / SACRAMENTO PEAK CORONAL DATA
TICK MARKS EVERY 25 MILLIONTHS

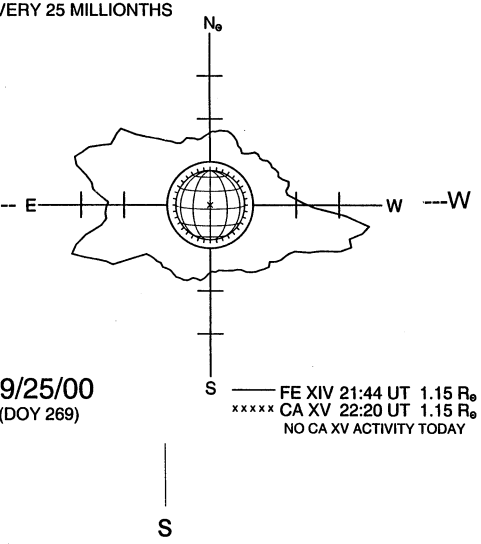

09/25/00
(DOY 269)

FE XIV 21:44 UT 1.15 $R_\odot$
xxxxx CA XV 22:20 UT 1.15 $R_\odot$
NO CA XV ACTIVITY TODAY

S