SEPTEMBER 24, 2000 (P= 25.38, Bo = 6.99, Lo = 82.45)

KITT PEAK MAGNETOGRAM

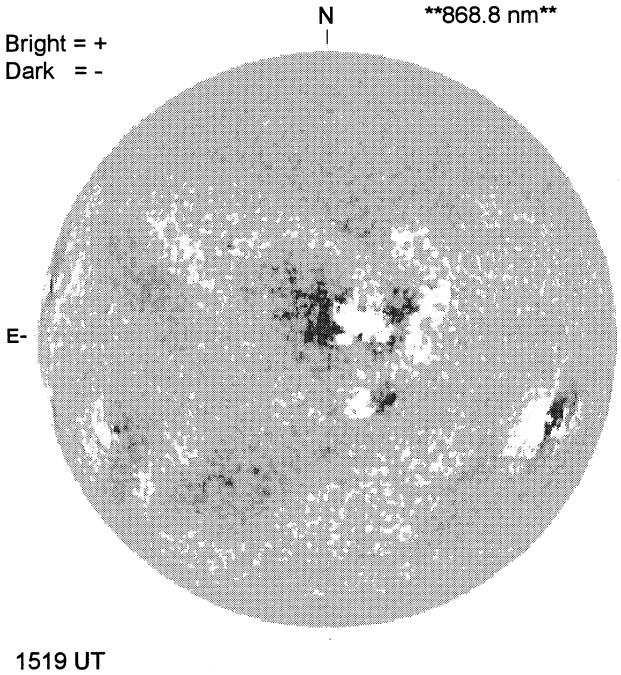

STANFORD MAGNETOGRAM

MT. WILSON MAGNETOGRAM

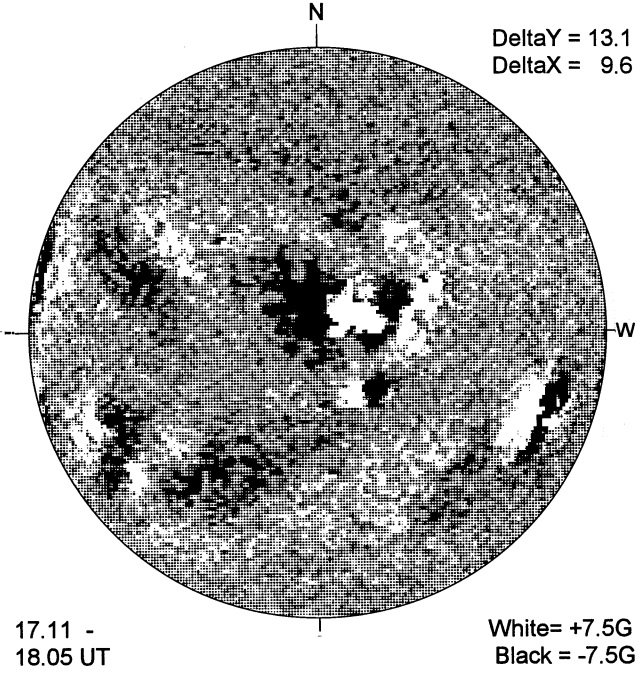

MEUDON H-ALPHA

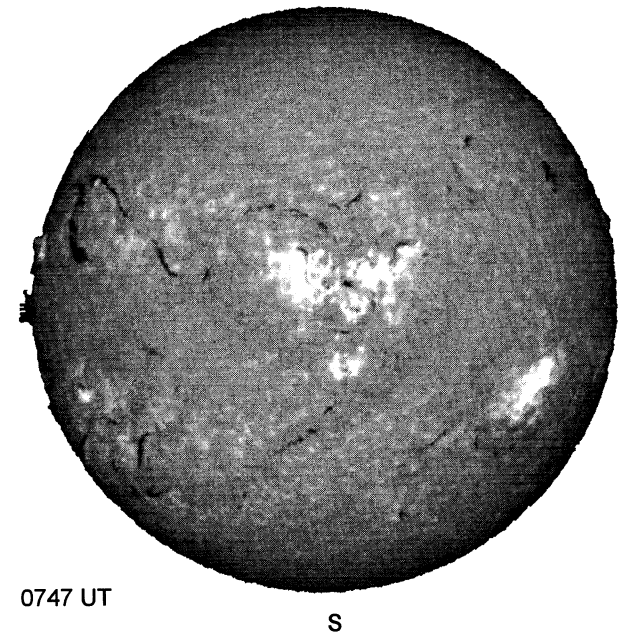

RAMEY SUNSPOT

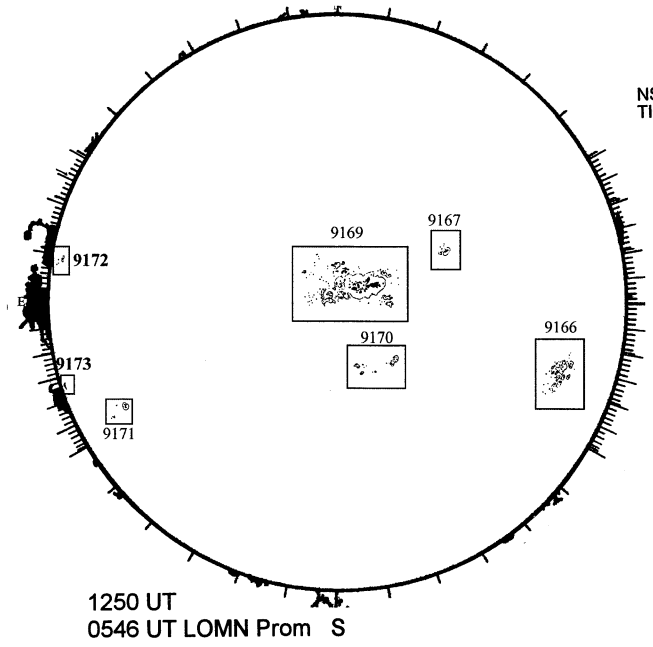
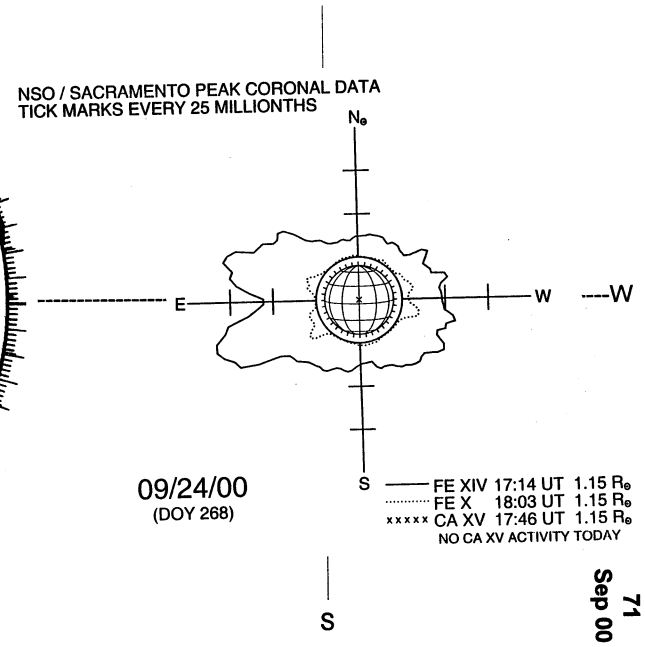
SACRAMENTO PEAK CORONA (1.15 Radii)----