SEPTEMBER 22, 2000 (P= 25.14, Bo = 7.05, Lo = 108.84)

KITT PEAK MAGNETOGRAM

Bright = +
Dark = -

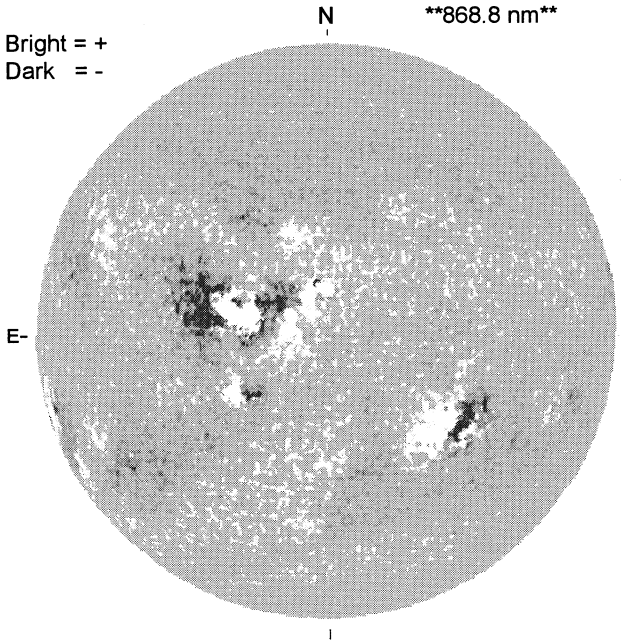

1812 UT

STANFORD MAGNETOGRAM

Solid = +
Dashed = -

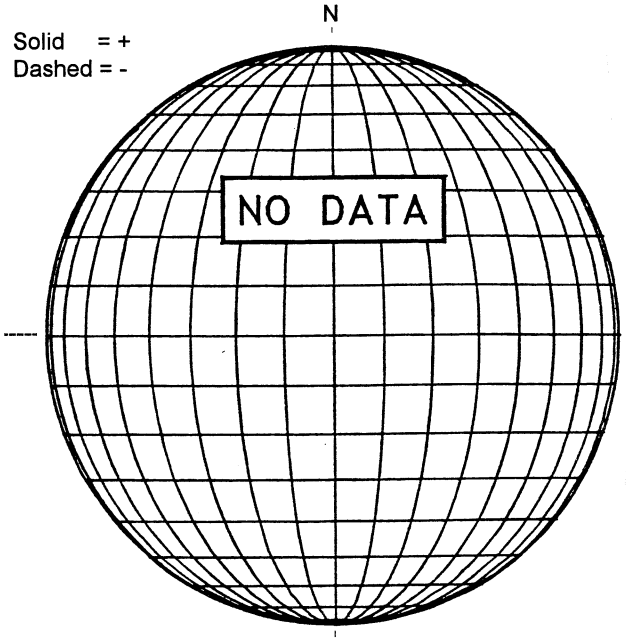

MT. WILSON MAGNETOGRAM

DeltaY =
DeltaX =

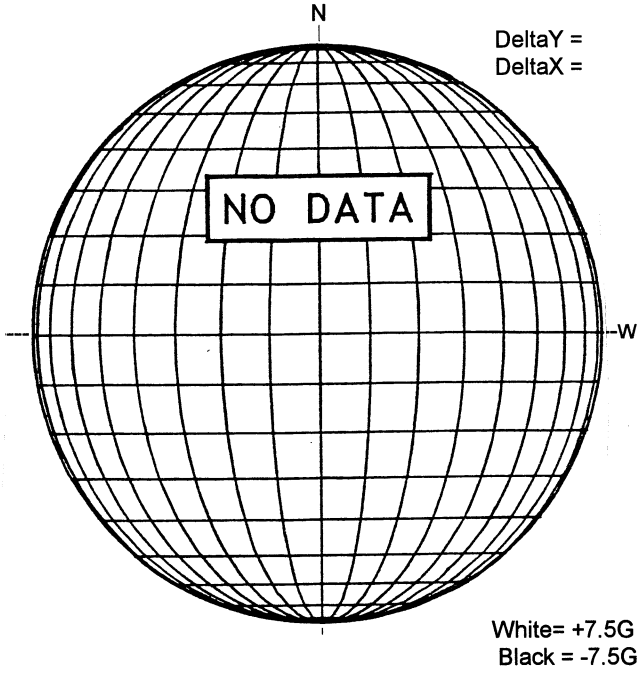

White= +7.5G
Black = -7.5G

MEUDON H-ALPHA

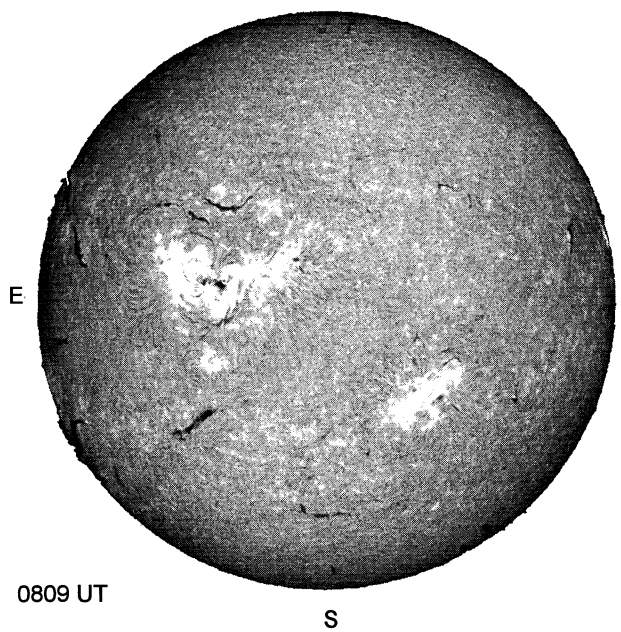

0809 UT

RAMEY SUNSPOT

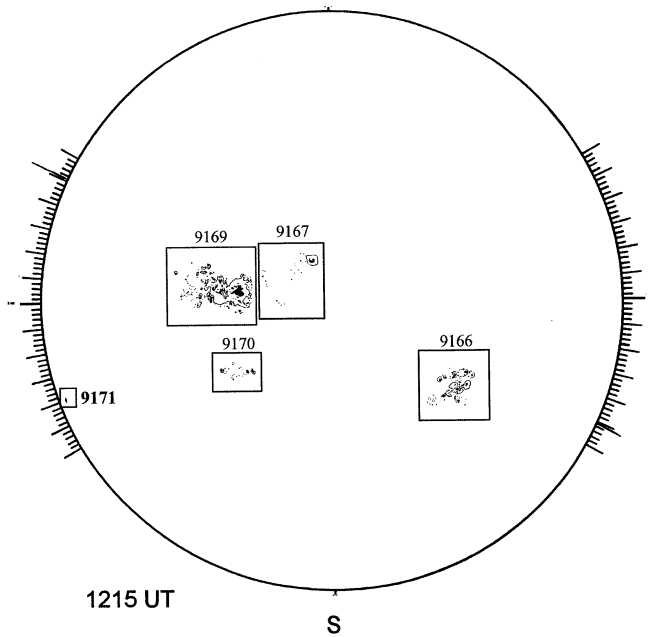

1215 UT

SACRAMENTO PEAK CORONA (1.15 Radii)

NSO / SACRAMENTO PEAK CORONAL DATA
TICK MARKS EVERY 25 MILLIONTHS

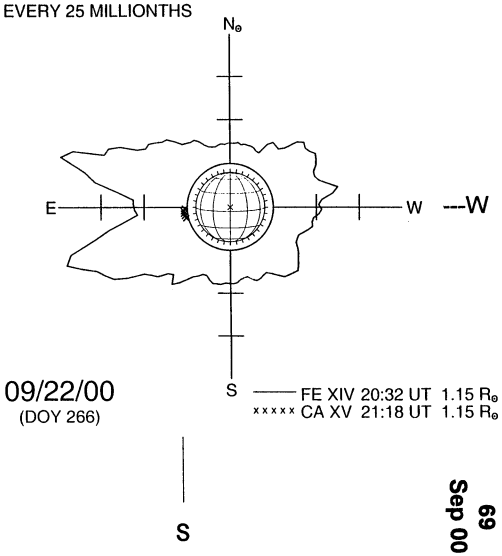

09/22/00
(DOY 266)

69
Sep 00