SEPTEMBER 21, 2000 (P= 25.01, Bo = 7.08, Lo = 122.04)

KITT PEAK MAGNETOGRAM

868.8 nm

Bright = +
Dark = -

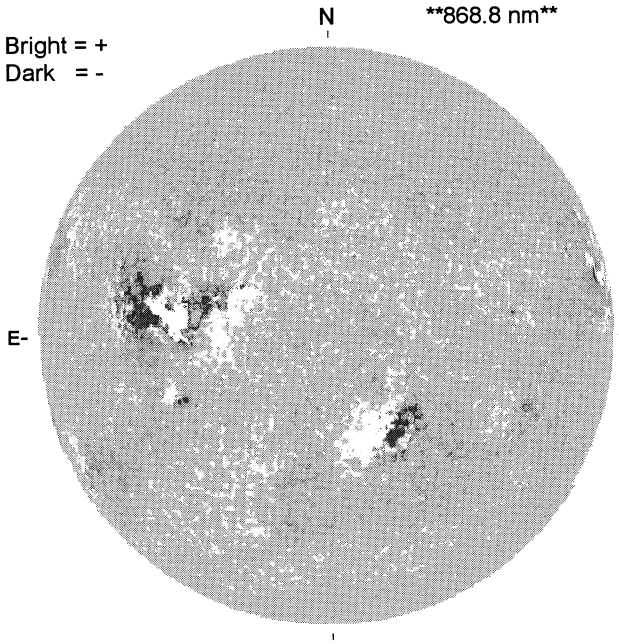

1434 UT

STANFORD MAGNETOGRAM

Solid = +
Dashed = -

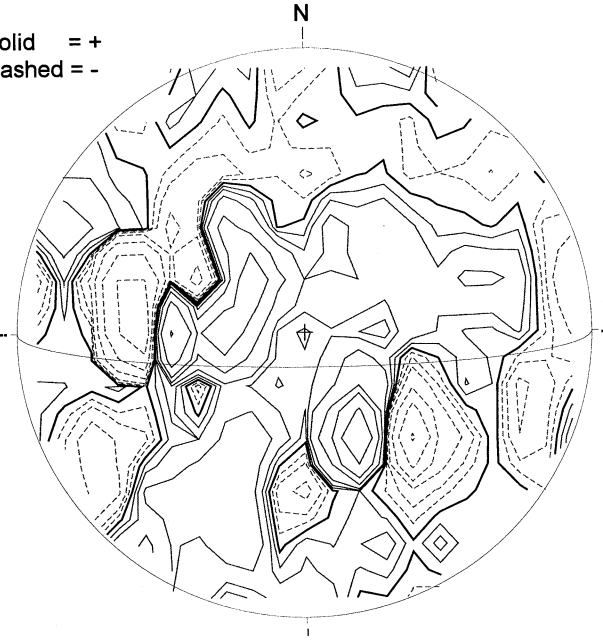

2256 UT

MT. WILSON MAGNETOGRAM

DeltaY = 13.1
DeltaX = 9.6

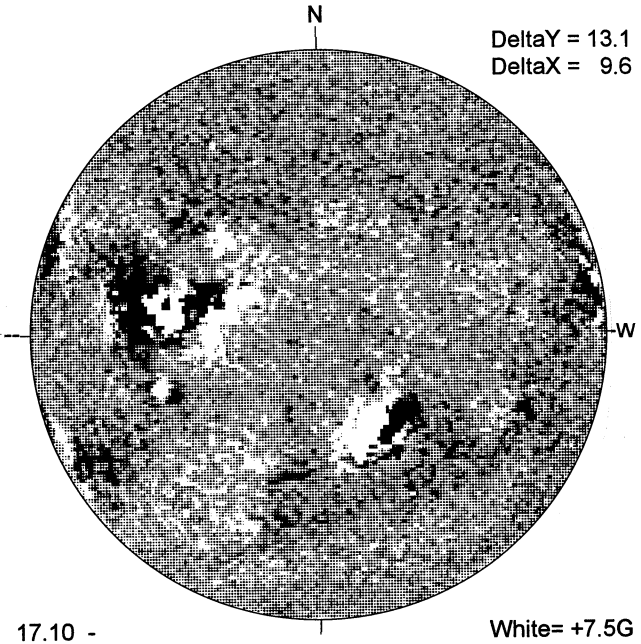

17.10 -
18.04 UT

White= +7.5G
Black = -7.5G

MEUDON H-ALPHA

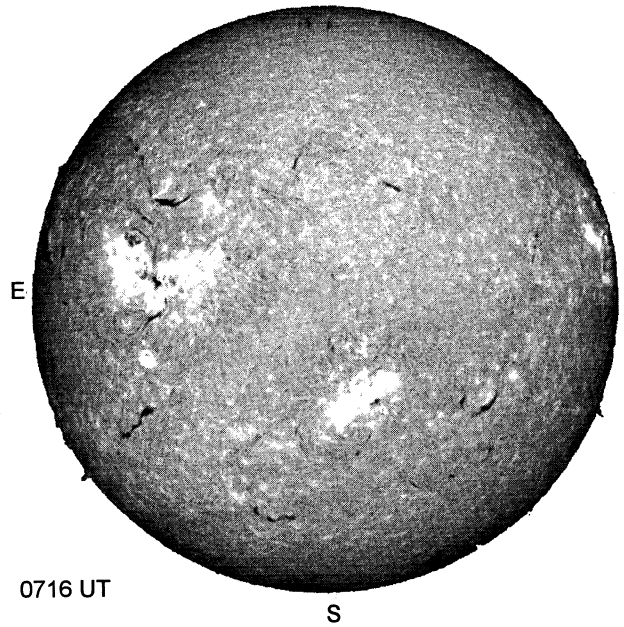

0716 UT

RAMEY SUNSPOT

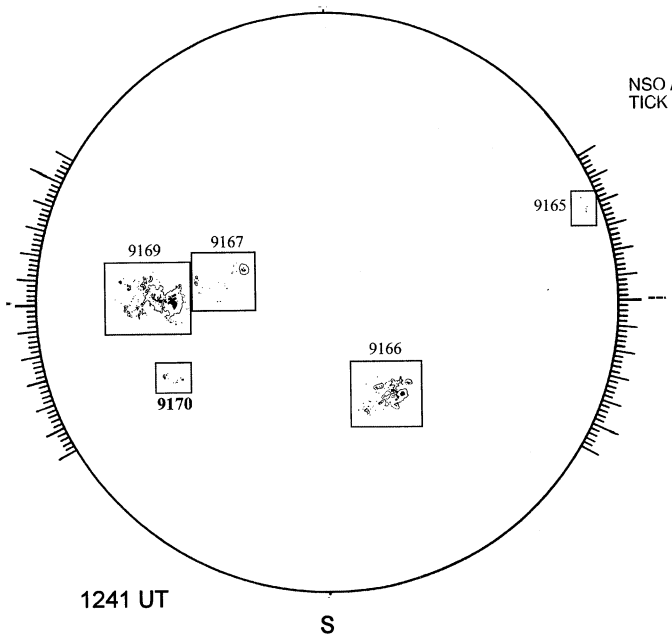

1241 UT

SACRAMENTO PEAK CORONA (1.15 Radii)

NSO / SACRAMENTO PEAK CORONAL DATA
TICK MARKS EVERY 25 MILLIONTHS

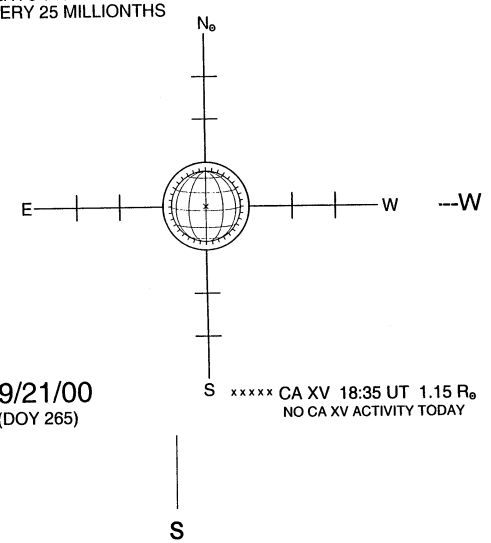

09/21/00
(DOY 265)

xxxxx CA XV 18:35 UT 1.15 R⊙
NO CA XV ACTIVITY TODAY