SEPTEMBER 19, 2000 (P= 24.74, Bo = 7.13, Lo = 148.44)

KITT PEAK MAGNETOGRAM

868.8 nm

Bright = +
Dark = -

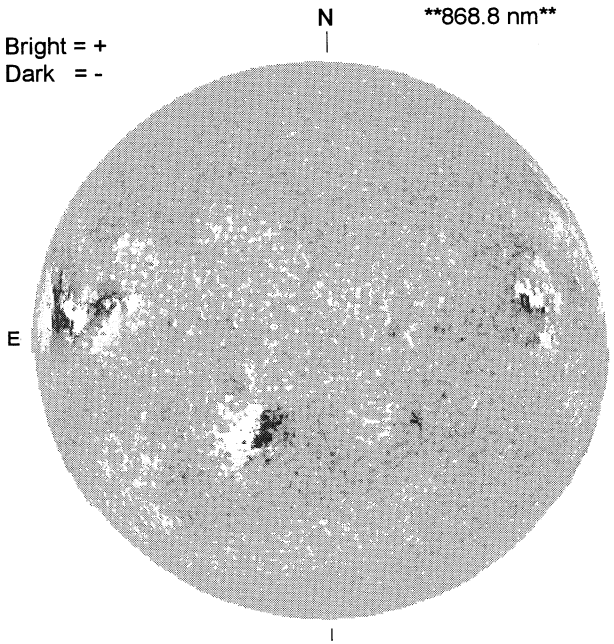

1440 UT

STANFORD MAGNETOGRAM

Solid = +
Dashed = -

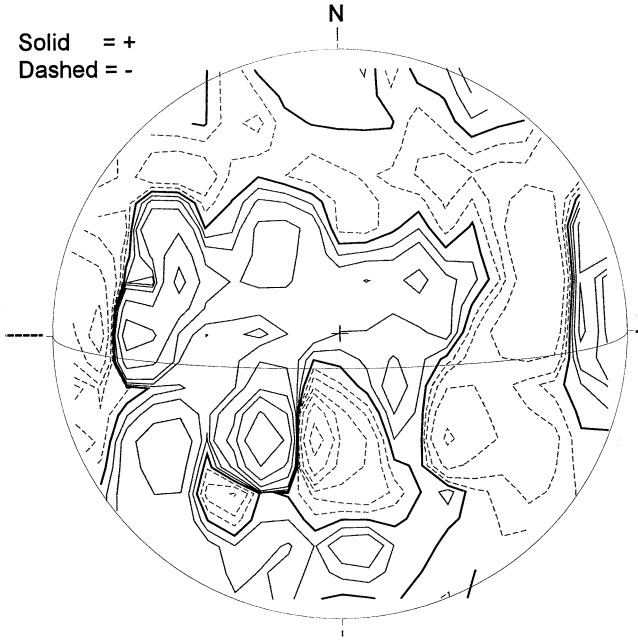

2227 UT

MT. WILSON MAGNETOGRAM

DeltaY = 13.1
DeltaX = 9.6

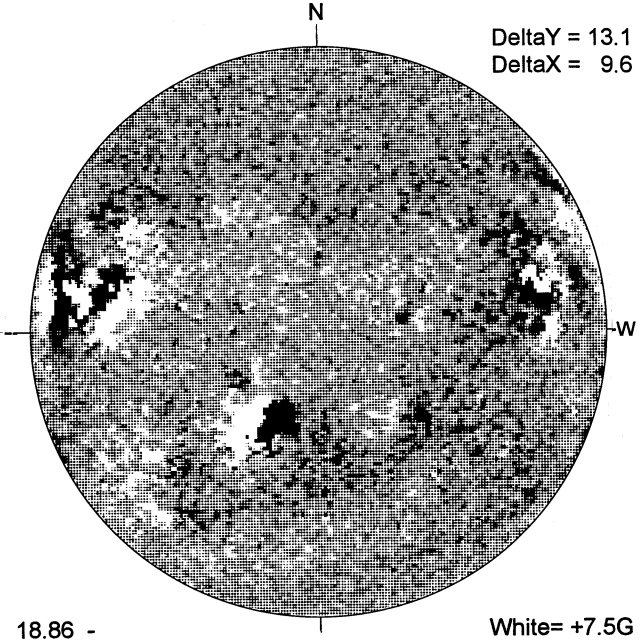

18.86 -
19.80 UT

White= +7.5G
Black = -7.5G

MEUDON H-ALPHA

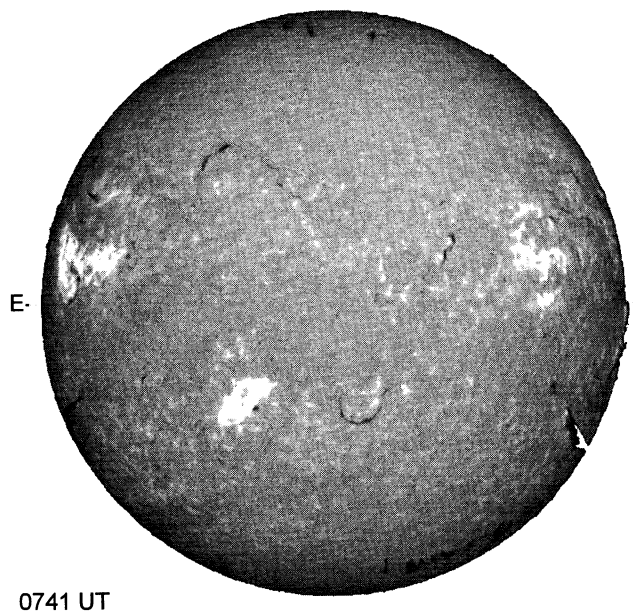

0741 UT

RAMEY SUNSPOT

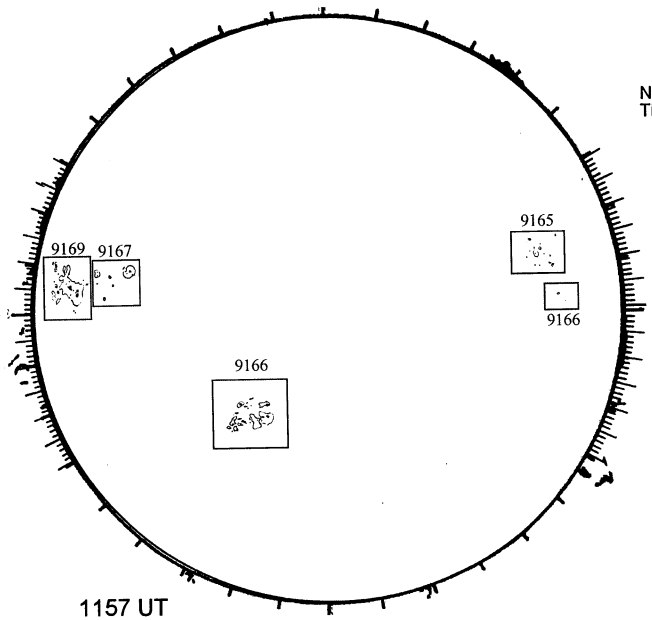

1157 UT
0941 UT LOMN Prom

SACRAMENTO PEAK CORONA (1.15 Radii)

NSO / SACRAMENTO PEAK CORONAL DATA
TICK MARKS EVERY 25 MILLIONTHS

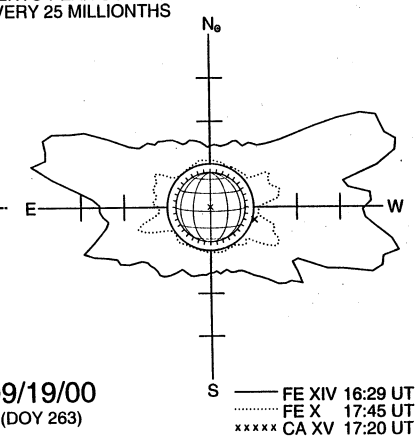

09/19/00
(DOY 263)

FE XIV 16:29 UT 1.15 R⊙
FE X 17:45 UT 1.15 R⊙
CA XV 17:20 UT 1.15 R⊙

S