SEPTEMBER 12, 2000 (P= 23.57, Bo = 7.24, Lo = 240.86)

KITT PEAK MAGNETOGRAM

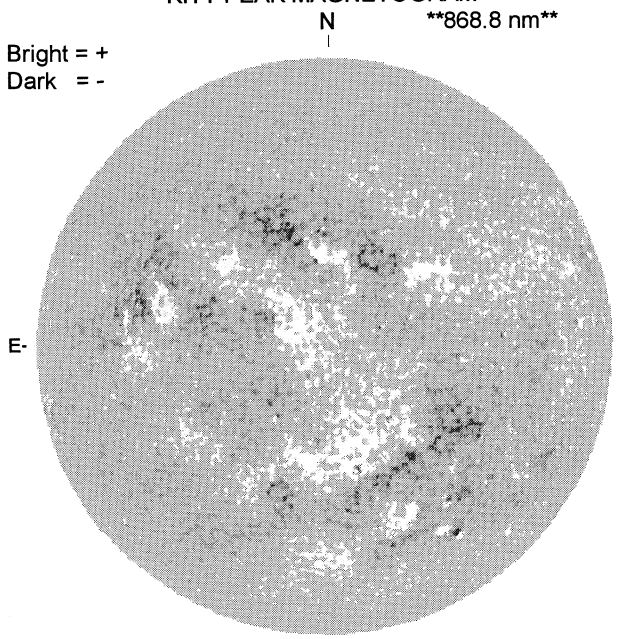

STANFORD MAGNETOGRAM

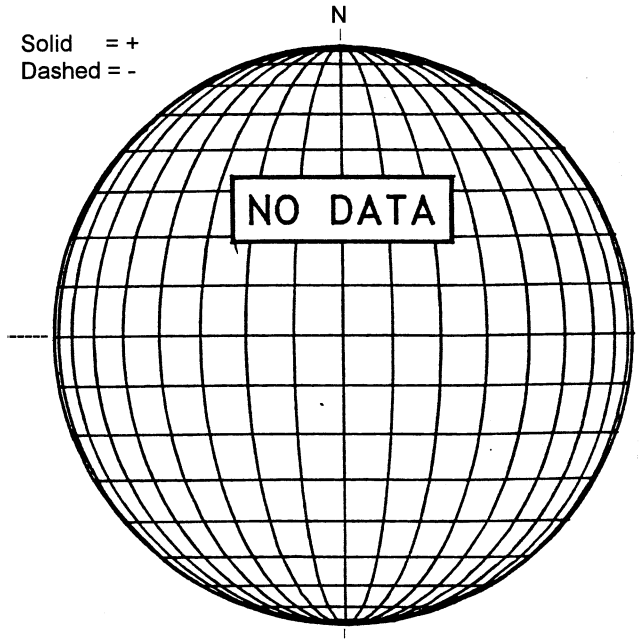

MT. WILSON MAGNETOGRAM

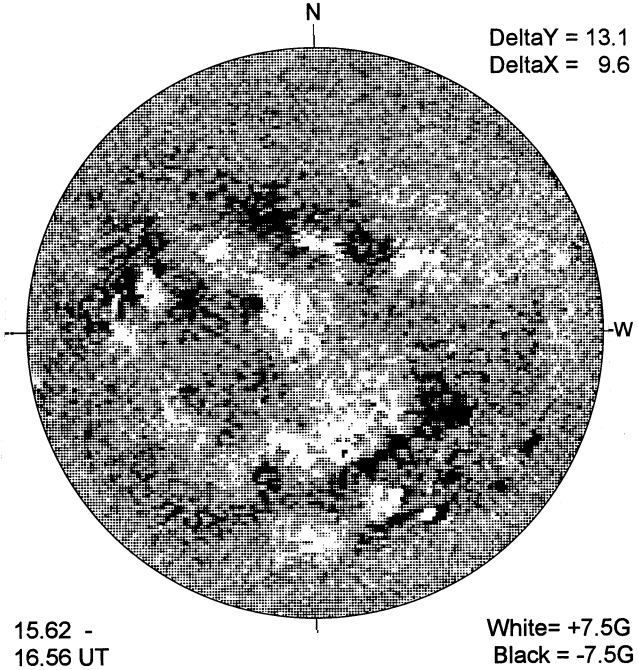

MEUDON H-ALPHA

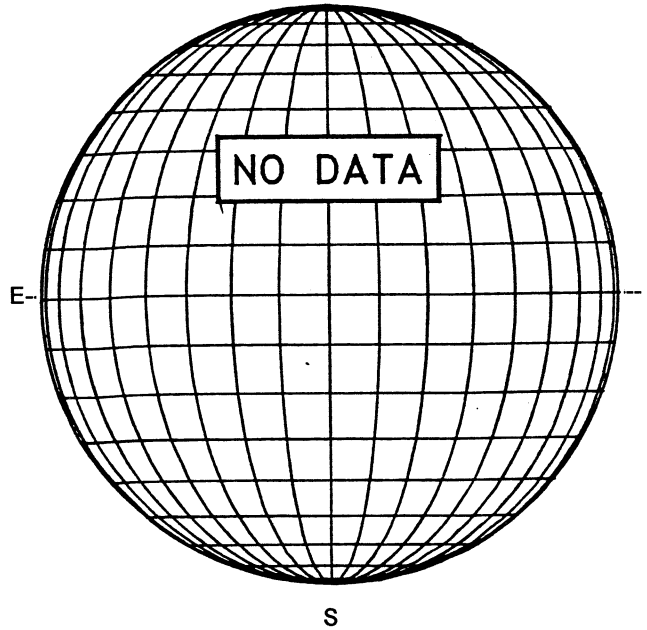

RAMEY SUNSPOTS

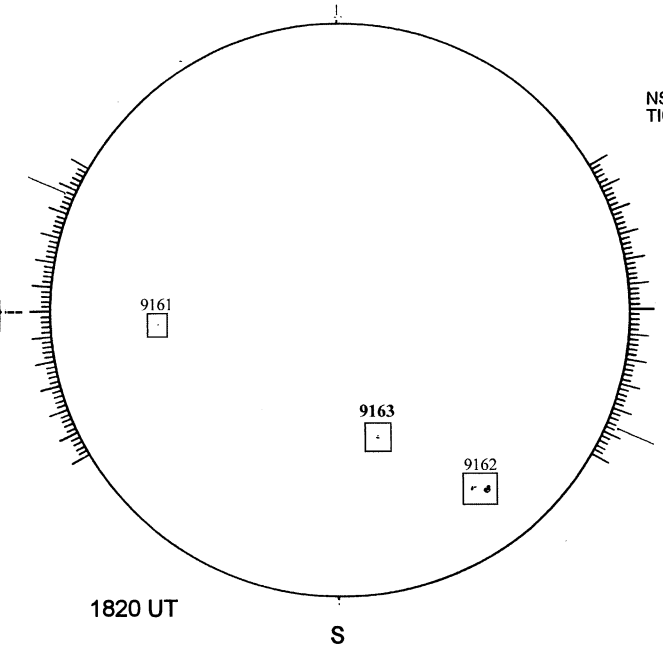
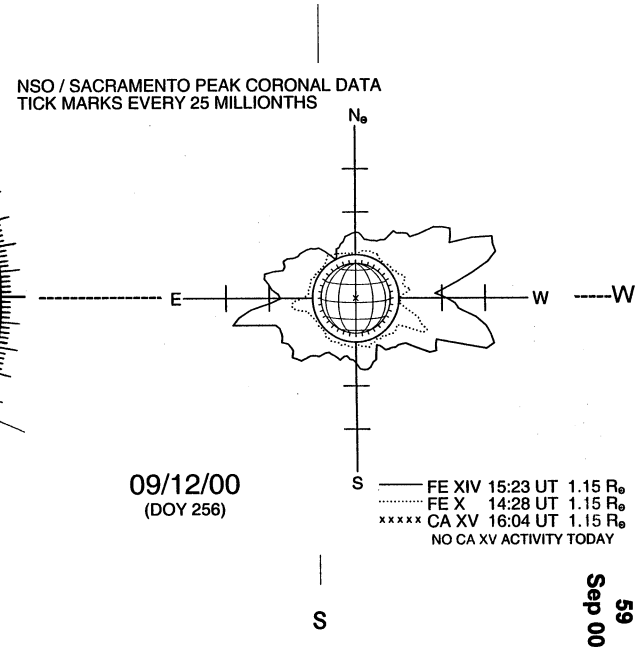
SACRAMENTO PEAK CORONA (1.15 Radii)----